US Department of Transportation
Federal Aviation Administration

MAJOR REPAIR AND ALTERATION
(Airframe, Powerplant, Propeller, or Appliance)

Form Approved OMB No. 2120-0020 2/28/2011

Electronic Tracking Number

For FAA Use Only

INSTRUCTIONS: Print or type all entries. See Title 14 CFR §43.9, Part 43 Appendix B, and AC 43.9-1 (or subsequent revision thereof) for instructions and disposition of this form. This report is required by law (49 U.S.C. §44701). Failure to report can result in a civil penalty for each such violation. (49 U.S.C. §46301(a))

1. Aircraft	Nationality and Registration Mark N959JT	Serial No. T20608983	
	Make CESSNA	Model T206H	Series
2. Owner	Name *(As shown on registration certificate)* PSL Surveys	Address *(As shown on registration certificate)* Address PO Box # 756 City Bristow State VA Zip 20136 Country United States	

3. For FAA Use Only

4. Type		5. Unit Identification			
Repair	Alteration	Unit	Make	Model	Serial No.
☐	☑	AIRFRAME	—	*(As described in Item 1 above)*	—
☐	☐	POWERPLANT			
☐	☐	PROPELLER			
☐	☐	APPLIANCE	Type Manufacturer		

6. Conformity Statement

A. Agency's Name and Address	B. Kind of Agency	
Name Straight Flight, Inc	☐ U. S. Certificated Mechanic	☐ Manufacturer
Address 13251 E. Control Tower Road, K12	☐ Foreign Certificated Mechanic	C. Certificate No.
City Englewood State Colorado	☑ Certificated Repair Station	
Zip 80112 Country United States	☐ Certificated Maintenance Organization	OMKR399L

D. I certify that the repair and/or alteration made to the unit(s) identified in item 5 above and described on the reverse or attachments hereto have been made in accordance with the requirements of Part 43 of the U.S. Federal Aviation Regulations and that the information furnished herein is true and correct to the best of my knowledge.

Extended range fuel per 14 CFR Part 43 App. B ☐	Signature/Date of Authorized Individual Ernest L. Smith IV November 13, 2013

7. Approval for Return to Service

Pursuant to the authority given persons specified below, the unit identified in item 5 was inspected in the manner prescribed by the Administrator of the Federal Aviation Administration and is ☑ Approved ☐ Rejected

BY								
	☐	FAA Flt. Standards Inspector	☐	Manufacturer	☐	Maintenance Organization	☐	Persons Approved by Canadian Department of Transport
	☐	FAA Designee	☑	Repair Station	☐	Inspection Authorization		Other *(Specify)*

Certificate or Designation No. OMKR399L	Signature/Date of Authorized Individual Ernest L. Smith IV November 13, 2013

INSP 1

FAA Form 337 (10-06)

NOTICE

Weight and balance or operating limitation changes shall be entered in the appropriate aircraft record. An alteration must be compatible with all previous alterations to assure continued conformity with the applicable airworthiness requirements.

8. Description of Work Accomplished
(If more space is required, attach additional sheets. Identify with aircraft nationality and registration mark and date work completed.)

N959JT	November 13, 2013
Nationality and Registration Mark	Date

Installed Gomolzig Flugzeug und Maschinenbau STC #SA03134NY "Low Noise Silencer Exhaust Extension" IAW Installation Instructions # II_Eng_16291_rev2_20120301 dated 1-03-2013 and Drawing #CT206H-606570.

Instructions for Continued Airworthiness: The Gomolzig Maintenance Manual Supplement issue 15.5.2012 was inserted into the aircraft records which requires 100 hour and 500 hour separate inspections.

Gomolzig Flight Manual Supplement issue 08.07 was inserted into the aircraft flight manual.

Weight and Balance was amended and inserted into the aircraft flight manual.

Information on this alteration is on file under Straight Flight's project number 7137.
**********END**********

☐ Additional Sheets Are Attached

US Department of Transportation
Federal Aviation Administration

MAJOR REPAIR AND ALTERATION
(Airframe, Powerplant, Propeller, or Appliance)

Form Approved OMB No. 2120-0020 2/28/2011

Electronic Tracking Number

For FAA Use Only

INSTRUCTIONS: Print or type all entries. See Title 14 CFR §43.9, Part 43 Appendix B, and AC 43.9-1 (or subsequent revision thereof) for instructions and disposition of this form. This report is required by law (49 U.S.C. §44701). Failure to report can result in a civil penalty for each such violation. (49 U.S.C. §46301(a))

1. Aircraft	Nationality and Registration Mark N959JT	Serial No. T20608983	
	Make Cessna	Model T206	Series
2. Owner	Name *(As shown on registration certificate)* PSL Surveys	Address *(As shown on registration certificate)* Address PO Box 756 City Bristow State VA Zip 20136 Country USA	

3. For FAA Use Only

The technical data identified herein has been found to comply with the applicable airworthiness requirements and is hereby approved for use only on the above described aircraft, subject to conformity inspection by a person authorized in CFR title 14, Part 43, section 43.7.
Approving Inspector: Julie A Summa **Date:** 3/29/2013
Denver FSDO, NM-03

4. Type		5. Unit Identification			
Repair	Alteration	Unit	Make	Model	Serial No.
☐	☐	AIRFRAME	—	*(As described in Item 1 above)*	—
☐	☐	POWERPLANT			
☐	☐	PROPELLER			
☐	☐	APPLIANCE	Type Manufacturer		

6. Conformity Statement

A. Agency's Name and Address	B. Kind of Agency		
Name Philip Glasgow	✓	U. S. Certificated Mechanic	Manufacturer
Address 2533 Dallas Creek Court		Foreign Certificated Mechanic	C. Certificate No.
City Fort Collins State Co		Certificated Repair Station	
Zip 80528 Country USA		Certificated Maintenance Organization	A&P 3292572 IA

D. I certify that the repair and/or alteration made to the unit(s) identified in item 5 above and described on the reverse or attachments hereto have been made in accordance with the requirements of Part 43 of the U.S. Federal Aviation Regulations and that the information furnished herein is true and correct to the best of my knowledge.

Extended range fuel per 14 CFR Part 43 App. B ☐

S[redacted]

7. Approval for Return to Service

Pursuant to the authority given persons specified below, the unit identified in item 5 was inspected in the manner prescribed by the Administrator of the Federal Aviation Administration and is ☑ Approved ☐ Rejected

BY								
		FAA Flt. Standards Inspector		Manufacturer		Maintenance Organization		Persons Approved by Canadian Department of Transport
		FAA Designee		Repair Station	✓	Inspection Authorization		Other *(Specify)*

Certificate or Designation No.
A&P 3292572 IA

Signature/Date of Authorized Indi[redacted]
Philip Glasgow

FAA Form 337 (10-06)

NOTICE

Weight and balance or operating limitation changes shall be entered in the appropriate aircraft record. An alteration must be compatible with all previous alterations to assure continued conformity with the applicable airworthiness requirements.

8. Description of Work Accomplished
(If more space is required, attach additional sheets. Identify with aircraft nationality and registration mark and date work completed.)

N959JT	4/2/13
Nationality and Registration Mark	Date

-Installed a Paravion Technology Inc Infared camera mounting provisions IAW STC STC SA 00295DE for a L3 Wescam MX10 camera system.

-Installed a Churchill Augmented Reality System IAW manufacturers installation drawings # ARS 500C-201210 Rev 6 10/24/12. Power is supplied from the avionics buss and is protected using a Klixon C/B P/N 7277-2-3 labeled "Mapping" Mounted the ARS system to the above installed Infrared camera mount and secured the ARS to the mount by fabricating 2 X support brackets. Ref Paravion Technology drawing 206ARS-1000 sheet 1 for full fabrication details. Mounted the GPS antenna to the roof of the aircraft structure at station 104.0 using manufacturer provided hardware.

-Mounted a 9.0"Airborne display monitor into the instrument panel. The primary display monitor is mounted to the instrument panel on the R/H side using 2X MS24693-363 screws. Attached 2X MS21059-L3 nut plates to the instrument panel using 4 X MS21426-3-4 countersunk rivets. The remote control unit is provided power from the avionics buss and is protected using a 3 Amp Klixon C/B P/N 7277-2-3. And is labeled "Monitor ". The remote control unit for the monitor is mounted to aircraft structure behind the instrument panel. Attached the control unit to the support brackets using 4 X screws P/N MS24693S26 and 4 X clip nuts P/N 294667. Fabricated the two supports from stock 6061 T6 aluminium and machined the support brackets. Ref Paravion Technology drawing 206ARS-1000 sheet 5 for fabrication details. Attached the support brackets to the instrument panel using 4 X screws P/N and 4 X nutplates P/N which are riveted to the support brackets using 8 X MS20426AD3-5 rivets. Fabricated a support brace from 6061 T6 aluminium 0.063" and bent to a 90 deg angle. Attached the brace to the supports using 2 X nutplates P/N MS21059L06 and 2 X screws P/N MS24693S26. Fabricated a plate for the remote control controls from 6061 T6 aluminum 1.5" X 4". Secured the power switch, dimmer switch, menu control switch, Video selection switch & the Downlink switch to this panel using the manufacturers provided switches. Secured the panel to the arm rest of the interior plastic using 4 X MS35206-226 screws, 4 X AN 960-6L washers & 4 X MS21083N06 nuts.

-Mounted The Janteq Downlink Control ECU to the floor at station 133.75 using 4 X MS27039-1-09 screws. Attached 3 X nut plates P/N MS2105L3N and attached to the existing structure using 6 X CR3213 4-4 rivets. Fabricated a doubler from 6061 T6 .063" 8.5" X .7 X.7 angle. Attached two of the afore mentioned nut plates to this doubler using the rivets mentioned above. Installed the Janteq Down link IAW manufacturers Dwgs . System is protected using a Klixon C/B switch P/N 7270-3-10 and is labeled "Down Link" Mounted two antennas on the bottom of the aircraft. Mounted the first antenna at station 150.0" on the bottom of the aircraft to the R/H side of the aircraft center line. Fabricated a doubler from 6061 T6 aluminium 4" X 5". Attached the antenna to the aircraft using 4 X P/N MS51987-48 screws, 4 X P/N AN960C8 washers & 4 X P/N MS21042-L08 nuts. Mounted the second antenna to the bottom of the aircraft at station 159.0" to the L/H side of the center line. Fabricated a doubler from 6061 T6 aluminium 4" X 5". Attached the antenna to the aircraft using 4 X P/N MS51987-48 screws, 4 X AN960C8 P/N washers & 4 X P/N P/N MS21042-L08 screws. Mounted the control head to the center console using 4 X P/N 2-56 screws. Fabricated a double and machined to fit. ref Paravion Technology Dwg C206ARS-1000 sheet 11 for fabrication details.

-Installed 2 X Aux Foot switches on the floor at station location 20.00". Fabricated foot switch holder form the same material as mentioned above for the center console and installed a 2 X switches P/N M8805/55-001 X 2. Attached the Foot switch housing Using 2 x MS35206-228 screws and 2 X AN960JD6L washers. to the floor using 3 X Nut plates P/N MS21075L06 & 1 X MS21069L06 nut plate. Attached the nut plates to the floor using 8 X MS20426AD3-3.5 Rivets.

☑ Additional Sheets Are Attached

NOTICE

Weight and balance or operating limitation changes shall be entered in the appropriate aircraft record. An alteration must be compatible with all previous alterations to assure continued conformity with the applicable airworthiness requirements.

8. Description of Work Accomplished
(If more space is required, attach additional sheets. Identify with aircraft nationality and registration mark and date work completed.)

N959JT	4/2/13.
Nationality and Registration Mark	Date

-Fabricated a breaker panel from .25" X 6.5" X 6.5" stock. Machined the required holes and location for the various connectors required. fabricated 2 X angles form .040" 6.5"X .75" X 1.25" 6061 T6 aluminium. Attached the angles to the breaker panel using 6 X screws P/N MS24693S26. Attached the assembly to the airframe using 4 X screws P/N MS24693S26. Attached 4 X nut plates P/N MS21069L06 to the existing structure using 8 X MS20426AD-3-4 rivets. Ref Paravion Technology Dwg C206ARS-1000 sheet 8 for fabrication details.

- Fabricated a carbon fiber housing to mount 2 X USB ports and 1 X hand controller cannon plug. Attached the housing to the aircraft structure on the floor between the seats at station 55.0 just aft of the existing vent using 4 X MS21075L3N nut plates. Attached the nut plates to the the floor using 4 X MS20426-3-4 countersunk rivets. used 4 X screws P/N MS27039-1-09 screws and 4 X AN960C10L washers. Ref attached Paravion Technology dwg C206ARS-1000 sheet 10 for fabrication details of the housing.

- Fabricated a mount for the existing Motorola XTVA radio housing form .063 6061 T6 aluminium 9" X 2". Attached the mount to the floor aft of the USB housing at station 65.0 using 2 X MS21075L3N nut plates. Attached the nut plates to the the floor using 4 X MS20426-3-4 countersunk rivets. used 2 X screws P/N MS27039-1-09 screws and 2 X AN960C10L washers. Ref Paravion Technology drawing C206ARS-1000 sheet 9 for fabrication details.

Wire gauge selection was done in accordance with AC43-13-1B Chapter 11, Aircraft Electrical System, section 5 (wiring rating) paragraphs 11-66, 11-67 section 6 (Aircraft Electrical Wire section) paragraphs 11-76, 11-77.

An electrical load does not exceed limitations of AC43-13-1b Chapter 11, paragraphs 424 (Electrical load limits), 425 (generator) and 428 (determination of electrical load).

The Instructions for Continued Airworthiness (ICA) contained in the Flight Standards Handbook Bulletin for Airworthiness (HBAW-8900.1) are not applicable as these components are not field repairable and are "Remove and Replace" items only.

Aircraft weight & balance and equipment list amended as required.

---------- Nothing follows ----------

☑ Additional Sheets Are Attached

United States of America

Department of Transportation—Federal Aviation Administration

Supplemental Type Certificate

Number **SA00295DE**

This certificate, issued to **Paravion Technology, Inc.**
2001 Airway Avenue
Fort Collins, CO 80524

certifies that the change in the type design for the following product with the limitations and conditions therefor as specified hereon meets the airworthiness requirements of Part 3 *of the* Civil Air *Regulations.*

Original Product—Type Certificate Number: A4CE
Make: Cessna Aircraft Company
Model: TU206G, 206H, & T206H

Description of the Type Design Change:
Installation of an external Infrared Imaging System in accordance with Paravion Technology Master Drawing List Report No. DL-C206IR-100, Revision N/C, dated March 29, 1997 or later FAA approved revision.

Limitations and Conditions:

1. This approval should not be extended to aircraft of this model on which other previously approved modifications are incorporated unless it is determined that the interrelationship between this change and any of those other previously approved modifications, including changes in type design, will introduce no adverse effect upon the airworthiness of that aircraft.
2. A copy of this Certificate and Flight Manual Supplement must be maintained as part of the permanent records for the modified aircraft.
3. FAA approved Aircraft Flight Manual Supplement, PR-C206IR-100M, Revision 0, dated June 11, 1997 or later FAA approved revision is required.
4. If the holder agrees to permit another person to use this certificate to alter the product, the holder shall give the other person written evidence of that permission.

This certificate and the supporting data which is the basis for approval shall remain in effect until surrendered, suspended, revoked, or a termination date is otherwise established by the Administrator of the Federal Aviation Administration.

Date of application: January 10, 1997 *Date reissued:*

Date of issuance: June 12, 1997 *Date amended:* April 8, 2004

By direction of the Administrator

Melissa Sandow, *(Signature)* Small Airplane Program Manager
Northwest Mountain Region
Denver Aircraft Certification Office
(Title)

Any alteration of this certificate is punishable by a fine of not exceeding $1,000, or imprisonment not exceeding 3 years, or both.

This certificate may be transferred in accordance with FAR 21.47.

FAA Form 8110-2(10-68)

PARAVION TECHNOLOGY, INC.
2001 AIRWAY AVENUE
FT. COLLINS, COLORADO 80524

REPORT NO. PR-C206IR-900M

INSTALLATION INSTRUCTIONS

FOR

INFRARED IMAGING SYSTEM

REVISIONS

REV.	DATE	DESCRIPTION	BY
N/C	11/02/00	Original	MR
A	05/18/01	Added Video Output Note.	MR
B	09/06/02	Added reference to C206IR-101-2 Support Installation, section 2.1.1.	GP
C	10/25/04	Section 2.1.1 added reference to FLIR U8000, U8500 Section 2.1.3 re-worded to clarify doubler installation Added Table 2.2, other minor wording changes to clarify	REB
D	01-07-05	Section 2.2.10 edited to include assembly of Item 33 Doubler and Item 26 beam Assembly.	REB
E	12/06/05	Sect. 2.1.8, page 1 was "... Remove fasteners which conflict with angle installation. Adjust clamps to support tube in center of opening and level tube to cabin floor." Clarified to indicate positioning laterally and longitudinally.	REB

TABLE OF CONTENTS

1.0 INTRODUCTION

This document provides a step-by-step procedure for installation of the C206IR-100 Infrared Camera System Installation in the Cessna 206 Aircraft. The instructions contained herein are intended to supplement the information contained on the installation drawings.

2.0 INSTALLATION PROCEDURES

2.1 Support Installation (Drawing C206IR-101)

2.1.1 If your camera system has a dual power/control cable from the gimbal to the electronic control unit (Ref. FLIR MK-I and MK-II) then use C206IR-101-1. If your camera system has a single power/control cable from the gimbal to the electronic control unit (Ref. FLIR MK-III, U7000 and U7500, U8000, U8500) then use C206IR-101-2.

2.1.2 Remove baggage floor covering and all necessary side panels.

2.1.3 Verify location of doubler between longitudinal stringers in baggage compartment area and trim doubler/shim as necessary. Mark location of doubler on fuselage and remove all conflicting fasteners. Match drill doubler to existing fastener holes. Locate and drill additional fastener holes per drawing. Remove doubler, de-burr holes and install using indicated hardware.

2.1.4 Locate and drill indicated hole through both fuselage and doubler as shown, de-burr. Install rivets around hole through fuselage and doubler.

2.1.5 Adhere extrusion to circumference of opening.

2.1.6 Temporarily clamp angles to support assembly.

2.1.7 Position clamped support assembly in aircraft through hole and perpendicular to aircraft centerline.

2.1.8 Remove fasteners which conflict with angle installation. Adjust clamps to center the tube in the previously drilled opening and parallel to the baggage compartment floor (laterally). The support tube longitudinal angle should be set by leveling the Electronic Control Unit Mount Bracket to the cabin floor, not to the baggage compartment floor. **CAUTION:** The C206IR-2500-1 Spacer (if used) and IR-1030-1 Angle are not symmetrical. Note correct orientation of parts before drilling baggage compartment floor.

2.1.9 Mark and match drill floor to support angles, remove clamped assembly.

2.1.10 Temporarily install indicated beam Assembly and support angles as shown. Match mark the beam for angles installation. Attach the angles to the beam in accordance to the drawing and temporarily re-install the assembly. Match drill the Beam Assembly to the previously drilled floor. Remove the beam Assembly and install the indicated Doubler (Nut Plate Assembly) using indicated fasteners(**NOTE:** It will be necessary to

trim the width of the doubler to fit inside the beam). Permanently install the beam Assembly using indicated hardware.

2.1.11 Match drill support legs to angles and secure using indicated hardware.

2.1.12 Reinstall support assembly by securing angles through spacer(optional if needed to adjust height) into the installed fastener assemblies in floor using indicated hardware.

2.1.13 Reinstall floor covering and fairing, trimming as necessary.

2.1.14 Install placard in a conspicuous location near existing baggage weight limits placard.

2.1.15 Optional use of MIL-S-8802F Class B2 sealant and DC4 or equivalent products, as indicated, may be desirable.

2.1 Equipment Cabinet Installation (Drawing C206IR-201)

2.2.1 Aircraft built prior to 1997 incorporate a lighter seat rail and require use of the C206IR-201-1 installation. The heavier seat rails in post-1997 aircraft require use of the C206IR-201-2 installation.

2.2.2 The equipment cabinet mount plate assembly may be installed to the seat rail pair in place of the copilot seat.

NOTE: See Table 2.2 for available Mount Plate options

TABLE 2.2; EQUIPMENT CABINET MOUNT PLATE INSTALLATIONS

Aircraft Mfr. Date	C206IR-201-1 Equipment Cabinet Installation	C206IR-201-2 Equipment Cabinet Installation
Pre-1997	C182IR-2500-1 Mount Plate Assy. Optional C182IR-2500-3 Assy.	
1997 and Later		C182IR-2500-2 Mount Plate Assy. Optional C182IR-2500-4 Assy.

2.2.3 Install Mount Plate Assembly to rail pair in desired location by sliding clamps onto rails. Mark locations for seat pin assemblies and remove to drill indicated holes.

2.2.4 Reinstall mount plate assembly to rail, slide clamps tight against rails and tighten screws.

2.2.5 Secure FWD/AFT movement by installing seat pin assemblies in drilled holes.

2.2.6 Install cabinet by inserting studs on bottom of cabinet into slots in the Mount Plate assembly and slide forward to small end of slot. Secure by inserting bolt through Mount Plate assembly and into cabinet nut plate.

2.2.7 Assure all fasteners are securely installed.

NOTE: Weight and balance data must be adjusted in accordance with actual weights and locations of installed equipment.

2.2 Equipment Installation (Drawing C206IR-251)

NOTE: All video outputs to any monitors should come from the VCR if installed.

The monitor and electronics support module (EU) installations are addressed by this drawing.

The equipment cabinet installation is designed to carry up to 25 lb. The equipment mounting bracket for the electronics support module is provided on the C206IR-1010-2 support assembly.

2.3.1 Monitor Installation:

2.3.1.1 The swivel support is designed to carry the Inframetrics monitor. Other monitor installations may require different mounting provisions and separate approval.

2.3.1.2 Remove the top cover of the monitor, then drill and install plate nuts on each side using the indicated rivets.

NOTE: Cover monitor assembly when modifying top cover to keep foreign material out. Reinstall monitor cover.

2.3.1.3 Adhere extrusion to perimeter of monitor glare shield using indicated adhesive.

2.3.1.4 Using indicated hardware, install the swivel support assembly to the monitor.

2.3.1.5 Place the monitor assembly on the top of the equipment cabinet, and secure using indicated hardware.

2.3.2 Electronics Unit Installation:

2.3.2.1 Install IR-2000-1 buttons to EU using indicated hardware.

2.3.2.2 Remove the clip from the rail assembly of EU mount.

2.3.2.3 Move the sliding shafts away from the keyholes in the rail assembly.

2.3.2.4 Fit the buttons on the EU into the keyways, and slide them into the keyway slots.

2.3.2.5 Move the sliding shafts against the EU and tighten the lock knobs. Replace the clip.

NOTE: Weight and balance calculations must include installed equipment.

2.4 Power Supply Wiring (Drawing C206IR-301)

2.4.1 Refer to drawing and camera system specification data for cable identification and connection.

2.4.2 Remove panels as necessary.

2.4.3 Install indicated circuit breaker in available aircraft breaker panel position. Provide electrical power through avionics buss.

2.4.4 Locate unused rocker type switch in lighting panel for use as infrared on/off switch.

2.4.5 Route power cable to electronics unit from infrared on/off switch. General cable routing should follow existing electrical wiring.

2.4.6 When system is installed for use, loose cables should be routed under seats and otherwise secured.

2.4.7 When system is disabled or removed, loose cables and controls must be stowed or removed.

SEQ No. 12JM003PA

U.S. DEPARTMENT OF TRANSPORTATION FEDERAL AVIATION ADMINISTRATION STATEMENT OF COMPLIANCE WITH AIRWORTHINESS STANDARDS			1. DATE 12/28/2012
AIRCRAFT OR AIRCRAFT COMPONENT IDENTIFICATION			
2. MAKE Cessna Aircraft Company	3. MODEL NO. 206	4. TYPE *(Airplane, Radio, Helicopter, etc,.)* Airplane	5. NAME OF APPLICANT Paravion Technology Inc.

LIST OF DATA

6. IDENTIFICATION	7. TITLE
Paravion Technology Drawing IR-605 Rev A dated 11/13/2012	Support Plate
Paravion Technology Document ER-C206ELP-2 (MX-10 Installation) Rev 4 dated 12/21/2012	Structural Analysis for Wescam MX-10 Installation Using 206IR-101 Support Installation & IR-605 Support Plate

Notes:

1. Only structural aspects of the above data are approved herein. This approval is for engineering design data only and is not an installation approval. It indicates the data listed above demonstrates compliance with the regulations specified by paragraph and subparagraph listed below as 'APPLICABLE REQUIREMENTS'. **(Compliance to additional regulations not listed here may be required).** This form does not constitute FAA approval of all engineering data necessary for substantiation of compliance to necessary requirements for the entire alteration/repair.
2. This approval is valid for Cessna Aircraft Company Model 206 S/N T20608983

8. PURPOSE OF DATA

Submittal of data in support of FAA Major Alteration

9. APPLICABLE REQUIREMENTS (List specific sections)

14 CFR 23.301, 23.303, 23.305(a), 23.307(a), 23.337(a), 23.601(a), 23.603, 23.605(a), 23.607(a), 23.609(a)(2), 23.611, 23.613, & 23.625(a).

10. CERTIFICATION -Under authority vested by direction of the Administrator and in accordance with conditions and limitations of appointment under 14 CFR Part 183 of the Federal Aviation Regulations, data listed above and on attached sheets numbered 2 have been examined in accordance with established procedures and found to comply with applicable requirements of the Federal Aviation Regulations.

I Therefore Recommend approval of these data

X Approve these data

11. SIGNATURES(S) OF DESIGNATED ENGINEERING REPRESENTATIVE(S)	12. DESIGNATION NUMBERS(S)	13. CLASSIFICATION(S)
Joe Musco	DERT-605388-NM	Structures

SEQ No. 12JM003PA

Applicable Requirement Amendment Levels:

FAR	Title	Amdt.
23.301	Loads	23-42
23.303	Factor of safety	-
23.305(a)	Strength and deformation	-
23.307(a)	Proof of structure	-
23.337(a)	Limit maneuvering load factor	-
23.601(a)	Design	-
23.603	Materials	-
23.605(a)	Fabrication methods	-
23.607(a)	Fasteners	-
23.609(a)(2)	Protection of structure	-
23.611	Inspection provisions	23-7
23.613	Material strength properties and design values	-
23.625(a)	Fitting factors	-

FLAMMABILITY REPORT, TEST, AND TEST RESULTS

PARAVION TECHNOLOGY, INC.
2001 AIRWAY AVENUE
FORT COLLINS, CO 80524

TABLE OF CONTENTS

flammability tests described in this document. The Vertical Flammability Test Cabinet meets the requirements of 14 CFR Part 25, Appendix F, Part I, Section (b)(3) and DOT/FAA/AR-00/12, Aircraft Materials Fire Test Handbook.

Equipment Nomenclature	Model Number	Manufacturer
Conditioning Chamber	Stabil-Therm Laboratory Oven	Blue M Electric Co. Blue Island, IL
Vertical Flammability Test Cabinet	7633A	United States Testing Co., Inc. Hoboken, NJ

5. TEST ARTICLE CONDITIONING

The test articles will be conditioned to 70° ± 5°F and at 50% ± 5% relative humidity until moisture equilibrium is reached or for 24 hours. Each specimen must remain in the conditioning environment until it is subjected to the flame.

6. CONFORMITY INSPECTIONS

Company conformity of the test articles will be conducted by Paravion Technology and documented on FAA Form 8130-9, Statement of Conformity. The test set-up will be verified by the witnessing Flammability DER to be in accordance with this test plan. The witnessing DER will coordinate with Paravion Technology, Inc, if design data changes are necessary, prior to DER approval.

7. VERTICAL TEST SET UP CONFIGURATION

The vertical test will be configured and conformed as follows, in accordance with 14 CFR Part 25, Appendix F, Part I, Section (b)(4):

- A Bunsen burner with a nominal 3/8 inch I.D. tube will be used for the test.
- Prior to testing, ignite the burner and set the flame height to 1½ inches.
- Using a calibrated thermocouple pyrometer, verify that the minimum flame temperature in the center of the flame is 1550° F. Record the flame temperature on the Test Data Sheet in Appendix B, and extinguish the flame.
- Set the automatic timer on the Flame Control Module to 12.0 seconds.
- Verify that the conditioning chamber has maintained the test articles at 70° ± 5°F and 50% ± 5% relative humidity for a minimum of 24 hours.
- Remove one test article from the conditioning chamber.

- Verify the test article has been positioned in the chamber in accordance with Section 7.0.
- Activate the automatic flame timer switch.
- Verify that the burner ignites and the flame is applied to the center of the edge of the specimen.
- Verify that the automatic flame timer extinguishes the flame after 12 seconds.
- Observe the behavior of the specimen after the burner flame is extinguished. Continue timing as long as the specimen continues to flame. Note any drippings from the specimen and the flame time of the drippings.
- Record the flame time, burn length (to the nearest 0.1 inch) and flame time of drippings on the test data sheet.

9. PASS/FAIL CRITERIA

The material is considered to pass this test if all of the following criteria are met:

- The average flame time of the specimen after removal of the flame source may not exceed 15 seconds.
- The average burn length may not exceed 8 inches.
- Drippings from the test specimen may not continue to flame for more than an average of 5 seconds after falling.

10. TEST WITNESSING AND DATA APPROVAL

The selected Flammability DER will witness the tests and approve the test results. A copy of the approved test report and 8110-3 will be forwarded to Paravion Technology, Inc.

11. DESIGNATED PERSONNEL

The following is a list of designated personnel to be involved in this project:

Title	Name
DER Flammability	Bob Lazaroff DERT-660022-NM

12. REFERENCES

The following documents form a part of this document to the extent specified herein:

13. Appendix A: Test Results Report from Mr. Lazaroff

FLAMMABILITY TEST REPORT
DATA SHEET

Test Article ID/PN	Material	Representative of: (list part number and description)	Regulatory Requirement and Amendment Level	Test Criteria per Part 25 Appendix F, Part I (mark "X" in appropriate block)			
				(a)(1)(i) 60 second Vertical	(a)(1)(ii) 12 second Vertical	(a)(1)(iv) 15 second Horizontal 2.5 in/min	(a)(1)(v) 15 second Horizontal 4.0 in/min
1, 2, 3	1x1 Plain Weave Carbon 2x2 Twill 3K Carbon LAM-135-FR Resin LAM-229 Hardener	Console	23.853(a) Amdt 23-62 *		X		

Test Sample	Test Results per Part 25 Appendix F, Part I (enter results in appropriate block)							
	(a)(1)(i) 60 second Vertical			(a)(1)(ii) 12 second Vertical			(a)(1)(iv) 15 second Horizontal	(a)(1)(v) 15 second Horizontal
	Burn Length (< 6 in)	After-Flame (< 15 sec)	Drip Flame (< 3 sec)	Burn Length (< 8 in)	After-Flame (< 15 sec)	Drip Flame (< 5 sec)	Burn Rate (< 2.5 in/min)	Burn Rate (< 4.0 in/min)
1				1.75 in	10.8 sec	No drips		
2				1.75 in	11.1 sec	No drips		
3				1.0 in	2.9 sec	No drips		
Average				1.50 in	8.3 sec	No drips		

* Tested to Part 25 requirements

Results: PASS ☒ FAIL ☐

DER: Robert C. Lagarde DER-660022-NM

U.S. DEPARTMENT OF TRANSPORTATION
FEDERAL AVIATION ADMINISTRATION

STATEMENT OF COMPLIANCE WITH AIRWORTHINESS STANDARDS

1. DATE: 04/10/2013

AIRCRAFT OR AIRCRAFT COMPONENT IDENTIFICATION

2. MAKE	3. MODEL NO.	4. TYPE *(Aircraft, Engine, Propeller, etc.)*	5. NAME OF APPLICANT
Cessna	T206	Aircraft	Paravion Technology, Inc.

LIST OF DATA

6. IDENTIFICATION	7. TITLE
Report No. C206-CF Console Revision 1, 04/08/2013	Flammability Report, Test and Test Results

Notes:

1. All engineering aspects of the above listed data are approved herein. This approval is for engineering data only. It indicates the data listed above demonstrates compliance only with the regulation specified by paragraphs and subparagraph listed below as "Applicable Requirements".

2. This approval is for flammability aspects of the proposed installation only. Additional approvals may be required for the substantiation of compliance to necessary requirements for the entire type design change.

3. Delegation to approve test plan and witness tests by Satish Lall, Denver ACO, per Special Authorization, 4/1/13.

4. This approval is valid for the installation of the Hand Control Connector Housing on Cessna Model T206, S/N T20608983 only.

8. PURPOSE OF DATA: In support of a major alteration to Cessna Model 206 S/N T20608983

9. APPLICABLE REQUIREMENTS (List specific sections)

14 CFR 23.853(a), Amendment 23-62

10. CERTIFICATION - Under authority vested by direction of the Administrator and in accordance with conditions and limitations of appointment under 14 CFR Part 183, data listed above and on attached sheets numbered N/A have been examined in accordance with established procedures and found to comply with applicable requirements of the Airworthiness Standards listed.

I (We) Therefore
- ☐ **Recommend approval of these data**
- ☒ **Approve these data**

11. SIGNATURE(S) OF DESIGNATED ENGINEERING REPRESENTATIVE(S)	12. DESIGNATION NUMBERS(S)	13. CLASSIFICATION(S)
Robert C. Lazaroff *Robert C. Lazaroff*	DERT-660022-NM	Structures

The Composites Store, Inc.

COPY

PRODUCT CONFORMANCE CERTIFICATION

Customer No.: **R17364** **Ship Date:** 03/11/2013

Sold To: **PARAVION TECHNOLOGY, INC.** **Ship To:** SAME

Purchase Order No. 43778 **Invoice No.:** 130964

Item No.	Description	Quantity
CF141	3.5 oz. Carbon Fabric, 42" wide, Plain Weave	9 ft.

FDI Style Number: 824
Lot Number: 22032 Yarn Type: T300 1K 309 NT
Roll Number: 6A Date of Mfg: 08/2012
Weave: PW, Count: 24.1 x23.2 inches; Width: 42 ¾ "; Weight: 126.0 g/m²
Thickness: 0.008 inches

We hereby certify that the material listed conforms to applicable commercial specifications, or government specifications as shown below.

SPECIFICATION: Commercial Grade

Gail Gewain, President

Website: www.cstsales.com
P.O. Box 622, Tehachapi, California 93581-0622 • Phone: 661-822-4162 • Fax 661-822-4121

U.S. COMPOSITES, INC.
561/588-1001
6670 WHITE DRIVE
WEST PALM BEACH FL 33407

* * * Invoice 256020 * * *

Bill To :
Paravion Technology, Inc.
Valerie McAlpine
2001 Airway Ave.
FORT COLLINS 80524

Ship To :

Customer No. 270051

DATE	ORDER NO.	SLS.NO.	ORDER DATE	PURCHASE ORDER	SPECIAL INSTRUCTIONS
03/28/13			03/28/13		

Quantity	U/M	Description Stock Number	Code	Price	Extension
1.00	ea	CERT FEE FOR PREVIOUS SHIPMENT INVOICE # 255095 LOT # 1233808 ROLL # 0003802464	0004	$10.00	$10.00

Payment/Terms :
prepaid credit card

SUBTOTAL : $10.00

TAX :

FREIGHT :

INVOICE TOTAL DUE ====> $10.00

From the Quality Control Laboratories of:

BGF INDUSTRIES

Certificate of Compliance

U S COMPOSITES INC
6670 WHITE DRIVE
WEST PALM BEACH FL 33407

Attention:

Date: 01/29/13 9:35:25
Page: 2

Style: 94933
Width: 50.0
Code/Part#
Contract: KB00219873 10

Cust P.O.: 403389
Weave: 2X2 TWILL

Lot Number: 01233808/00010

Yarn Type Warp: TR30S 3K

Fill: TR30S 3K

Shipment Defect Summary

Lot #	Cut	Roll #	Yards	Distortion	Yard Length	Defect
1233808	009	0003802303	100	.1	6	DISTORTION
1233808	011	0003802308	100	.0		No Defects Recorded
1233808	013	0003802463	100	.1		No Defects Recorded
1233808	012	0003802464	100	.0		No Defects Recorded
1233808	017	0003803687	100	.2		No Defects Recorded
1233808	016	0003803688	100	.0		No Defects Recorded

90 Huger Street Cheraw, SC 29520 (843) 537-3172 Fax (843) 537-7062

Certificate of Conformity

GRAFIL INC.
6900 88th Street
Sacramento, CA 95828 USA

Phone No. 916/386-1733 or 800/365-5633
Fax No. 916/379-2183

Order No. 30586
Customer No. BGF01

Deliver To: BGF Industries Inc.
Cheraw Speciality Weaving
90 Huger Street
90 Huger Street
Cheraw, SC 29520
USA

Certificate of Conformity: 23444
GI Reference: 30586
Certificate Date: 01/16/2013
Fiber Type: TR30S 3K 1.2%S
PYROFIL

Size: 1.2%S
Quantity in lbs: 3,491.84

Customer Purchase Order		Item #	Specification			Salesperson	Customer Part #	
03006103-20		TR-30S-3LSL	CF-202 Ver.1			Wayne Schaefer		
Batch No.	Date of Manufacture	Quantity (lbs)	Strength (ksi)	Modulus (msi)	Yield (yd/lb)	Fiber Density (lb/in3)	Size Content (% by Mass)	Elongation (%)
1233303A	03/2012	357.12	604.0	33.8	2469.0	0.06429	1.2	1.80
1253304A	05/2012	3,134.72	603.0	33.4	2469.0	0.06419	1.2	1.80
	Cert total:	3,491.84						

Shelf Life for Pyrofil: 3 years from Date of Manufacture

Certified that the supplies/services detailed herein have been inspected and tested in accordance with the conditions and requirements of the contract or conform in all respects to the specification(s), drawings relevant thereto.

Signed: _____
For and on behalf of
Grafil Inc.

Monday, March 11, 2013

PRO-SET

To Whom it May Concern:

This is to certify that the PRO-SET® product(s) that you recently purchased were manufactured in accordance with our standard quality control procedures. In addition, a representative sample from each batch was tested for conformity to our internal specifications and a portion of that sample will be retained for 18 months from the production date.

RESULTS OF ANALYSIS

Product:	Batch Number:	Date Produced	Tested With:
LAM-135-FR	1363018A	01-18-2013	LAM-224

DSC 822e	Limits
TPeak1=85.69(°C)	85.38-86.73(°C)
TPeak2=0(°C)	-(°C)
dH=489.44(J/g)	434.82-505.34(J/g)
tg=90.43(°C)	89.77-93.4(°C)

Viscosity	Limits
3972cPs	3662-4027cPs

STATEMENT OF SHELF LIFE

Minimum 3 years from date of manufacture when stored in original sealed container.

Sincerely,

PRO-SET, INC.

NOTES:
VOLTAGE RANGE: 11 - 30 VOLTS
POWER CONSUMPTION: 72 VA
TROLL INTERFACE: CONNECTOR P2 PINS H, J & K
FOR REFERENCE USE ONLY

REVISION HISTORY			
REV	DESCRIPTION	DATE	APPROVED
A	INITIAL RELEASE	3/16/2011	O REYES

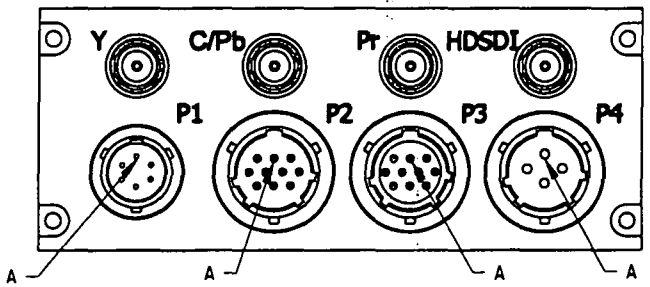

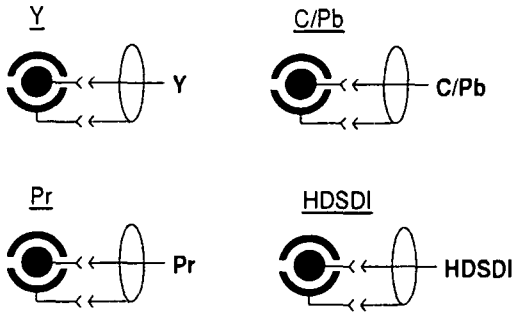

HAND HELD CONTROLLER

PT02E-10-6S (TX Chassis) — PT06E10-6P(SR) (Free Plug)

P1

Pin	Signal
A	+12 VOLTS
B	CAN -
C	CAN +
D	GRD
E	ASI +
F	ASI -

DATA INTERFACE

PT02E-12-10S (TX Chassis) — PT06E12-10P(SR) (Free Plug)

P2

Pin	Signal	
A	VCC +5V(RED)	USB INTERFACE
B	DATA - (WHT)	USB INTERFACE
C	DATA + (GRN)	USB INTERFACE
D	GND (BLK)	USB INTERFACE
E	DATA RX+	USER DATA, RS422
F	DATA RX-	USER DATA, RS422
G	GND	USER DATA, RS422
H	DATA	CONTROL DATA, RS232, RS485
J	DATA	CONTROL DATA, RS232, RS485
K	GND	CONTROL DATA, RS232, RS485

AUDIO INTERFACE

PT02E-12-10S (TX Chassis) — PT06E12-10P(SR) (Free Plug)

P3

Pin	Signal	
A		
B		
C	AUDIO -	CHANNEL 1
D	AUDIO +	CHANNEL 1
E		
F	AUDIO -	CHANNEL 2
G	AUDIO +	CHANNEL 2
H		
J		
K	CABLE SHEILD	

POWER INTERCONNECT

PT02E-12-4P (TX Chassis) — PT06E12-4S(SR) (Free Plug)

P4

Pin	Signal
A	+V (18-30V)
B	+V (18-30V)
C	GRD
D	GRD

TOLERANCE INFO:
ALL DIMENSIONS ARE IN INCHES.
DECIMAL .XX ±.01, .XXX±.0025, ANGULAR ± .3°
HOLE SIZE +.003, -.002, CONCENTRICITY ±.001,
FLATNESS ±.0025, SURFACE FINISH 63 OR BETTER

PART NO: 1011139
REV: A
DESIGNER: J PORTER
ENGINEER: O REYES
SHEET: 1 OF 1
DATE: 3/16/2011

AVIATION Tx WIRING INTERFACE

JANTEQ CORPORATION
9272 JERONIMO RD.
IRVINE, CA. 92618
PH: (949) 215-2603
FAX: (949) 215-2604

REVISIONS

ISSUE	REV.	DESCRIPTION	DATE	APP'D

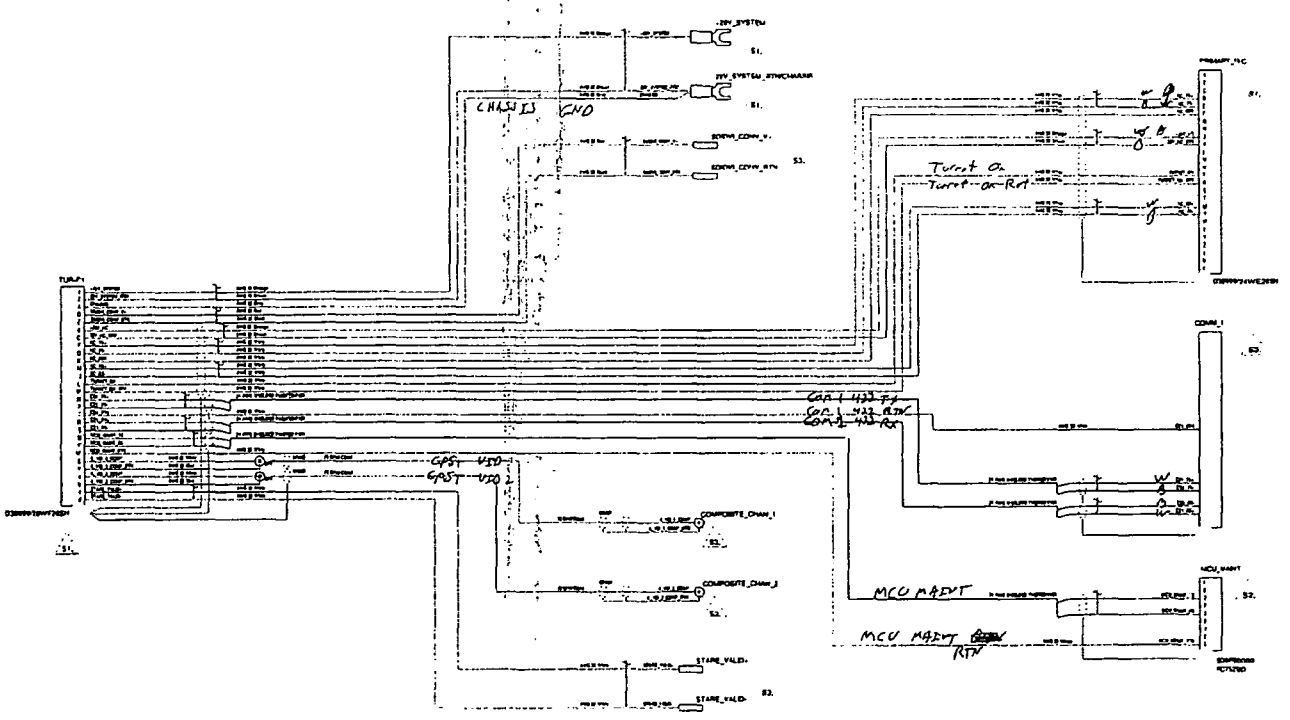

NOTES:

S1. SPECIFIED CONNECTOR IS REQUIRED.

S2. RECOMMENDED; CONNECTOR WOULD BE USEFUL FOR WESCAM TROUBLE SHOOTING. HOWEVER IT IS NOT REQUIRED.

S3. *OPTIONAL; REQUIREMENT DEPENDANT ON INDIVIDUAL SYSTEM CONFIGURATION AND OPTIONS. SPECIFIED CONNECTOR IS REQUIRED IF CONFIGURATION IS DESIRED.*

ENSURE GOOD ELECTRICAL CONDUCTIVITY BETWEEN SHIELDS AND BACKSHELL.

MINIMUM WIRE GUAGE IS IDENTIFIED.

REFERENCE DOCUMENT: 64270 ICD FOR MX-10 DIGITAL TURRET.

REFERENCE ONLY, ICD TAKES PRECEDENCE.

WESCAM

BURLINGTON, ONTARIO, CANADA

11/04/01
P.OLIVEIDO
D.PRINCE
E.WONG
ECO01870
53572-E3S

HTS

SHEET 1 OF 1

3AC24 53574-01 1 -

COMPUTER GENERATED
DO NOT MODIFY MANUALLY
DO NOT SCALE DRAWING

ZONE	REV.	REVISIONS DESCRIPTION	DATE	APP'D

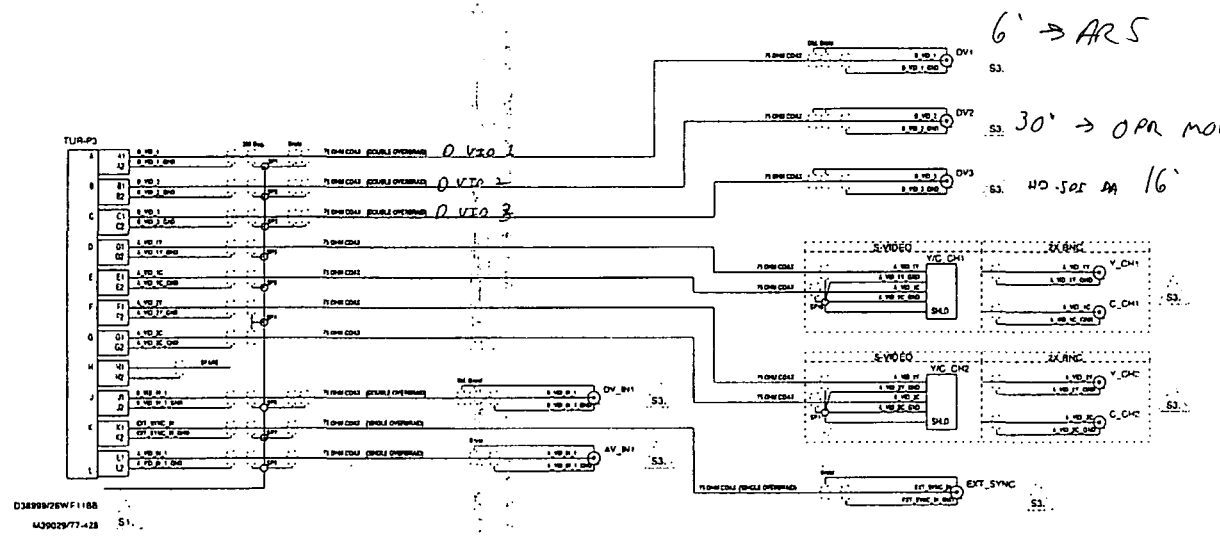

NOTES:

S1. SPECIFIED CONNECTOR IS REQUIRED.

S2. RECOMMENDED; CONNECTOR WOULD BE USEFUL FOR WESCAM TROUBLE SHOOTING, HOWEVER IT IS NOT REQUIRED.

S3. OPTIONAL; REQUIREMENT DEPENDANT ON INDIVIDUAL SYSTEM CONFIGURATION AND OPTIONS. SPECIFIED CONNECTOR IS REQUIRED IF CONFIGURATION IS DESIRED.

ENSURE GOOD ELECTRICAL CONDUCTIVITY BETWEEN SHIELDS AND BACKSHELL.

MINIMUM WIRE GUAGE IS IDENTIFIED.

REFERENCE DOCUMENT: 64270 ICD FOR MX-10 DIGITAL TURRET.

REFERENCE ONLY, ICD TAKES PRECEDENCE.

WESCAM

BURLINGTON,
ONTARIO,
CANADA

11/06/01
P.QUEVEDO
D.PRINCE
S.WONG
ECO012670
535741-.E3S NTS

SHEET 1 OF 1

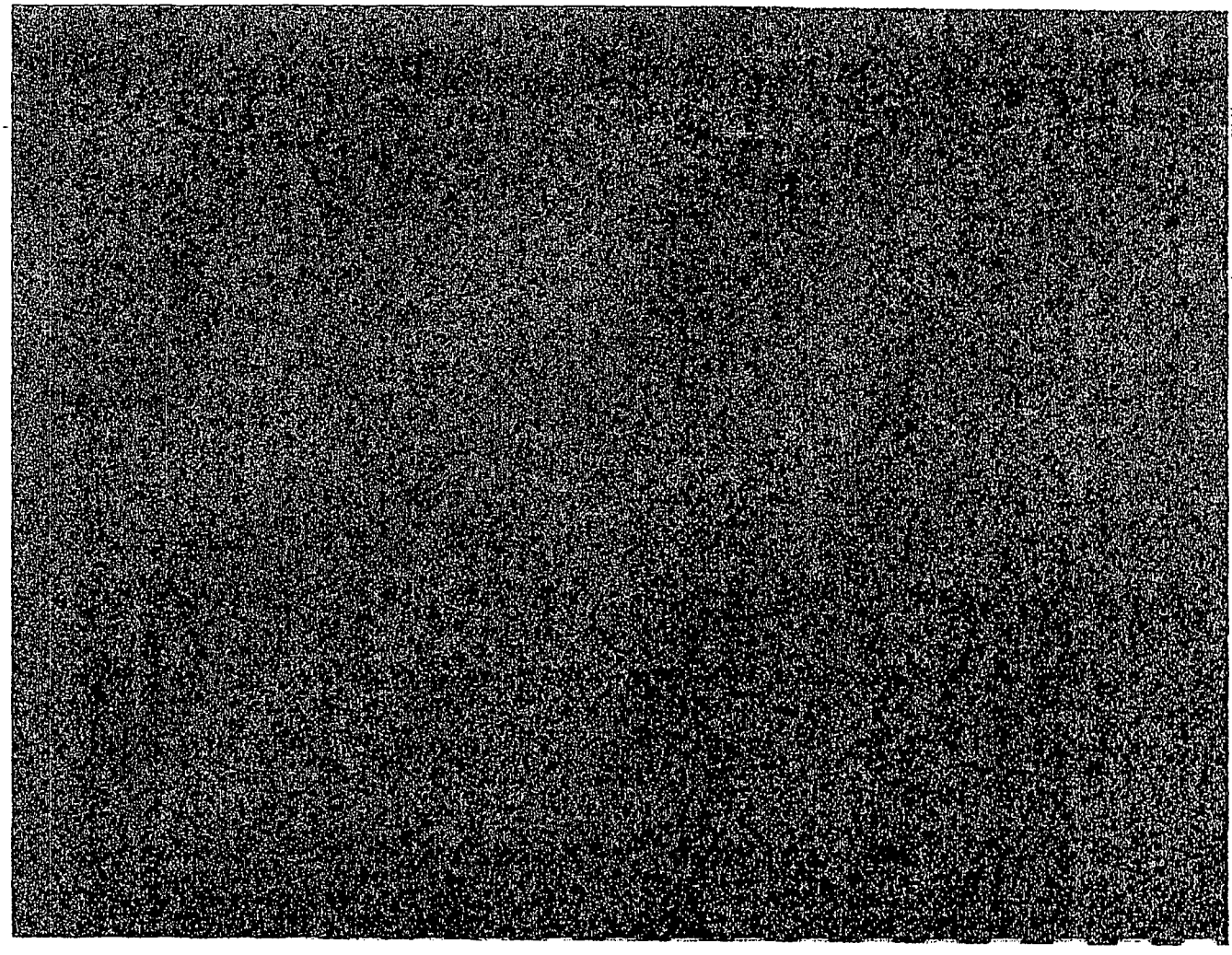

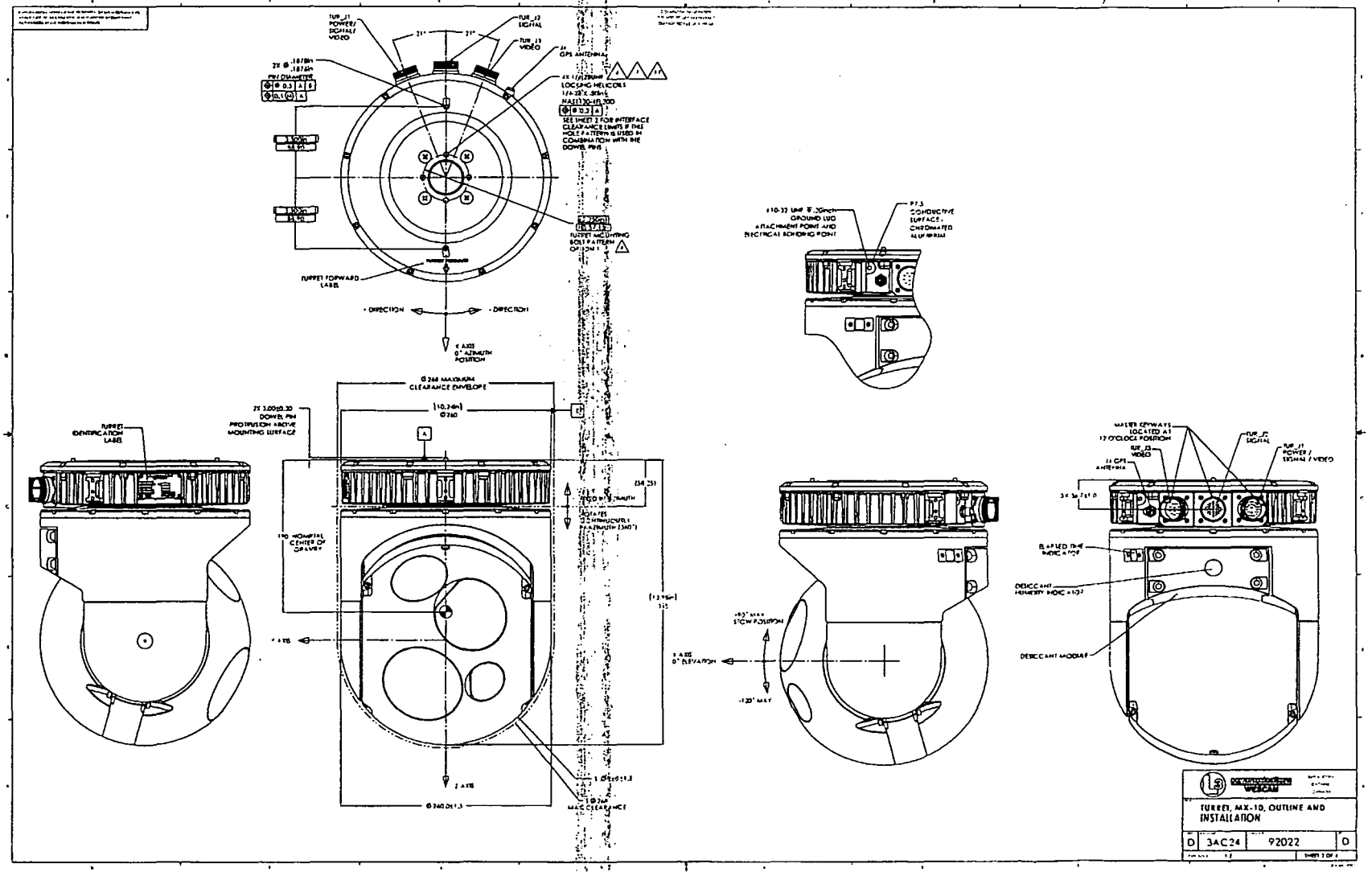
TURRET, MX-10, OUTLINE AND INSTALLATION
D
3AC24
92022
D

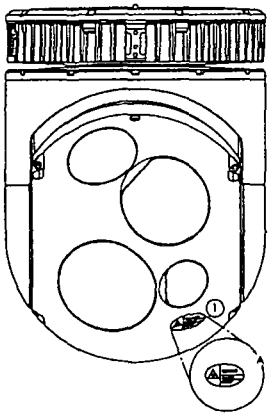

DETAIL A
SCALE 2 : 1

LASER LABEL REQUIREMENTS & LOCATIONS		
	DUAL DIVERGENCE LASER ILLUMINATOR (DDLI)	EYESAFE LASER RANGE FINDER (ELRF)
SYSTEM LABELS	① LASER RADIATION APERTURE ② LASER RADIATION MONO	NONE
END USER SPECIFIC LABELS	③ FDA CERTIFICATION OR FDA EXEMPTION	③ FDA CERTIFICATION OR FDA EXEMPTION

LASER RADIATION MONO LABEL (DDLI)					
H1	X1	Y1	H2	X2	Y2
WIDE	40m	240m	HARROW	400m	2,400m

FDA CERTIFICATION LABEL	
LASER TYPE	VARIANCE
DDLI	2010-V-0151 (EFFECTIVE 2011/01/20)
ELRF	NONE

FOR REFERENCE ONLY

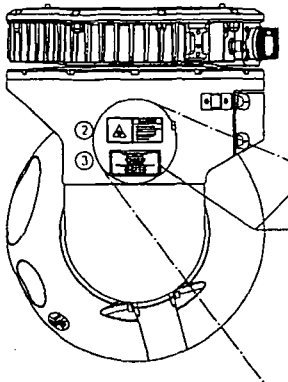

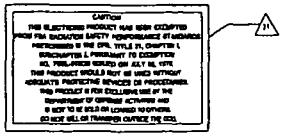

DETAIL C
SCALE 2 : 1

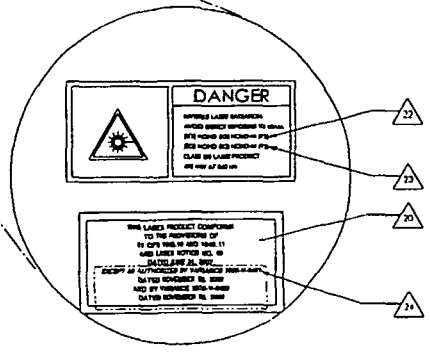

DETAIL B
SCALE 2 : 1

LASER RADIATION WARNING LABELS

D	3AC24	92022	D

TURRET, MX-10, OUTLINE AND INSTALLATION

3AC24 53412 1 A04

COMPUTER GENERATED
DO NOT REVISE MANUALLY
DO NOT SCALE DRAWING

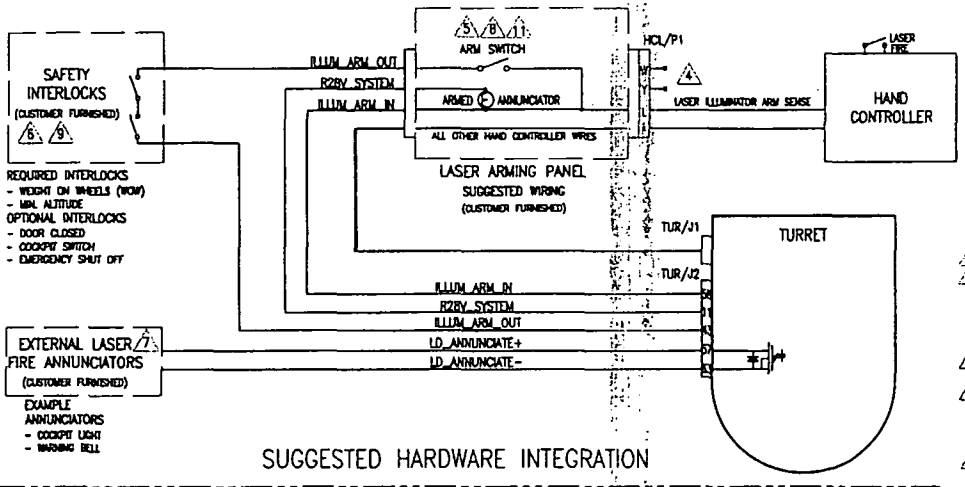

SUGGESTED HARDWARE INTEGRATION

LASER ARMING SEQUENCE

- SAFTEY INTERLOCK(S) MUST BE CLOSED FOR "ILLUM_ARM_OUT" TO PROVIDE POWER TO THE ARMING PANEL.
- LASER ARMING PANEL KEY(S) AND/OR SWITCH(S) SWITCH "ILLUM_ARM_IN" FROM OPEN TO +28VDC.
- WHEN "ILLUM_ARM_IN" IS +28VDC, POWER TO THE LASER IS ENABLED AND THE LASER IS ARMED.

LASER FIRING SEQUENCE

- THE LASER MUST BE ARMED.
- TO FIRE THE LASER, THE "LASER" BUTTON ON THE HANDCONTROLLER MUST BE HELD CLOSED FOR TWO SECONDS. AFTER THE TWO SECOND DELAY, THE LASER IS ISSUED THE FIRE COMMAND IN SOFTWARE.
- THERE IS A 50 MILLISECOND DELAY AFTER RECEIVING THE FIRE COMMAND BEFORE ACTUAL LASING.

LASER ARMED ANNUNCIATION

- WHILE THE LASER IS ARMED, AN "ARMED" ANNUNCIATOR ACROSS J2 PINS 11 AND 58 IS ILLUMINATED, THE "ARMED" LED ON THE HAND CONTROLLER IS ILLUMINATED, AND THE TEXT CUE "ARMED" IS DISPLAYED ON THE VIDEO OVERLAY.
- NOTE THAT WHEN "CUTOUT" IS DISPLAYED ON THE VIDEO OVERLAY THE LASER IS ARMED BUT CANNOT FIRE UNTIL THE LASER LINE OF SIGHT IS OUTSIDE OF THE CUTOUT ZONES DEFINED IN SOFTWARE.

LASER FIRING ANNUNCIATION

- WHILE THE LASER IS FIRING, SOFTWARE CLOSES A MOSFET ACROSS J2 PINS 57 AND 63 ACTIVATING CUSTOMER FURNISHED RELAYS TO DRIVE LASER FIRE WARNING DEVICES.
- WHILE THE LASER IS FIRING, SOFTWARE ILLUMINATES THE HANDCONTROLLER "FIRING" LED AND DISPLAYS "ACTIVE" ON THE OVERLAY.

REVISIONS

ZONE	REV.	DESCRIPTION	DATE	APP'D
	A01	INITIAL RELEASE	27-FEB-09	EC07013
	A02	AS PER ALPHA EC07492	31-MAR-09	EC07492
	A03	AS PER ALPHA ECO011470	29 JAN 10	ECO11470
	A04	AS PER ALPHA ECO011698	16 FEB 10	ECO11698

NOTES

1. THIS IS A FUNCTIONAL DIAGRAM ONLY. DO NOT RELY ON FOR DETAIL ELECTRICAL DESIGN. INSTALLATION REQUIREMENTS MAY DIFFER FROM THE FEATURES PROVIDED BY THIS DRAWING.
2. +28VDC IS IN REFERENCE TO R28V_SYSTEM UNLESS OTHERWISE STATED
3. ENSURE DESIGN KEEPS "ILLUM_ARM_IN" OPEN (UNARMED STATE) OR AT +28VDC (ARMED STATE).
4. PINS W & Y OF THE HAND-CONTROLLER ARE NOT CONNECTED.
5. ALL DEVICES (INCLUDING ANNUNCIATORS) THAT ARE POWERED FROM ILLUM_ARM_IN OR ILLUM_ARM_OUT MUST BE SUNK TO R28V_SYSTEM; MAX CURRENT 250mA. ALL OTHER DEVICES MUST BE ISOLATED FROM ILLUM_ARM_OUT/ILLUM_ARM_IN/R28V_SYSTEM. ENSURE THAT ILLUM_ARM_OUT (+28VDC) AND ILLUM_ARM_IN ARE NEVER PERMITTED TO MAKE A DIRECT CONNECTION TO R28V_SYSTEM, OR CHASSIS.
6. MAX RESISTANCE BETWEEN PINS 43 AND 58 (ILLUM_ARM_IN/OUT) WHEN SAFETY INTERLOCKS ARE CLOSED IS < 0.5 Ohm.
7. INDEPENDENTLY POWERED LASER FIRE WARNING DEVICES MAY BE ACTIVATED VIA A SWITCH CLOSED BY SOFTWARE ACROSS J2 PINS 57 AND 63 (LD_ANNUNCIATE+/-). SWITCH IS 28V LOGIC, 250mA MAX AT HIGH STATE. ENSURE VOLTAGE OF PIN 57 WITH RESPECT TO 63 IS +28VDC WITHIN THE TOLERANCES SPECIFIED IN MIL-STD-704F.
8. IT IS RECOMMENDED THAT THE ARM SWITCH, AS REPRESENTED IN THIS SCHEMATIC, INCORPORATE A KEYED SWITCH. THE KEY SHOULD NOT BE REMOVABLE IN THE ENABLED (CLOSED) POSITION. ARM SWITCH MUST TRANSISTION FROM AN 'ARMED' TO AN 'UNARMED' STATE UPON ANY INTERRUPTION OF 'SAFE28' (SAFETY INTERLOCKS).
9. WOW AND MIN ALT INTERLOCKS MUST BE IMPLEMENTED. MIN ALT SHALL PROVIDE CLOSURE ONLY WHEN AIRCRAFT ALT AGL EXCEEDS THE LARGEST UNAIDED NOHD SPECIFIED IN OUTLINE & INSTALLATION DRAWING.
10. LASER ILLUMINATOR IS A NON-EYE SAFE AND INVISABLE CLASS IV LASER. FAILURE TO COMPLY WITH MANDATORY INTEGRATION REQUIREMENTS MAY COMPROMISE SAFETY AND RESULT IN HAZARDS. SEE SAFETY WARNINGS IN OPERATOR'S MANUAL.
11. IT IS RECOMMENDED THAT AN EMERGENCY STOP SWITCH BE INCORPORATED.

MX-10 WITH HANDCONTROLLER (HCL)

L3 communications WESCAM

2009/03/31

P. QUEVEDO

J. COMBOC

EC07492

534121A041.DWG NTS SHEET 1 OF 1

WESCAM PART No.

L3 communications WESCAM	LASER CUTOUT DEFINITION FORM	FM1287 Rev -

Customer Name: _____ Date: _____

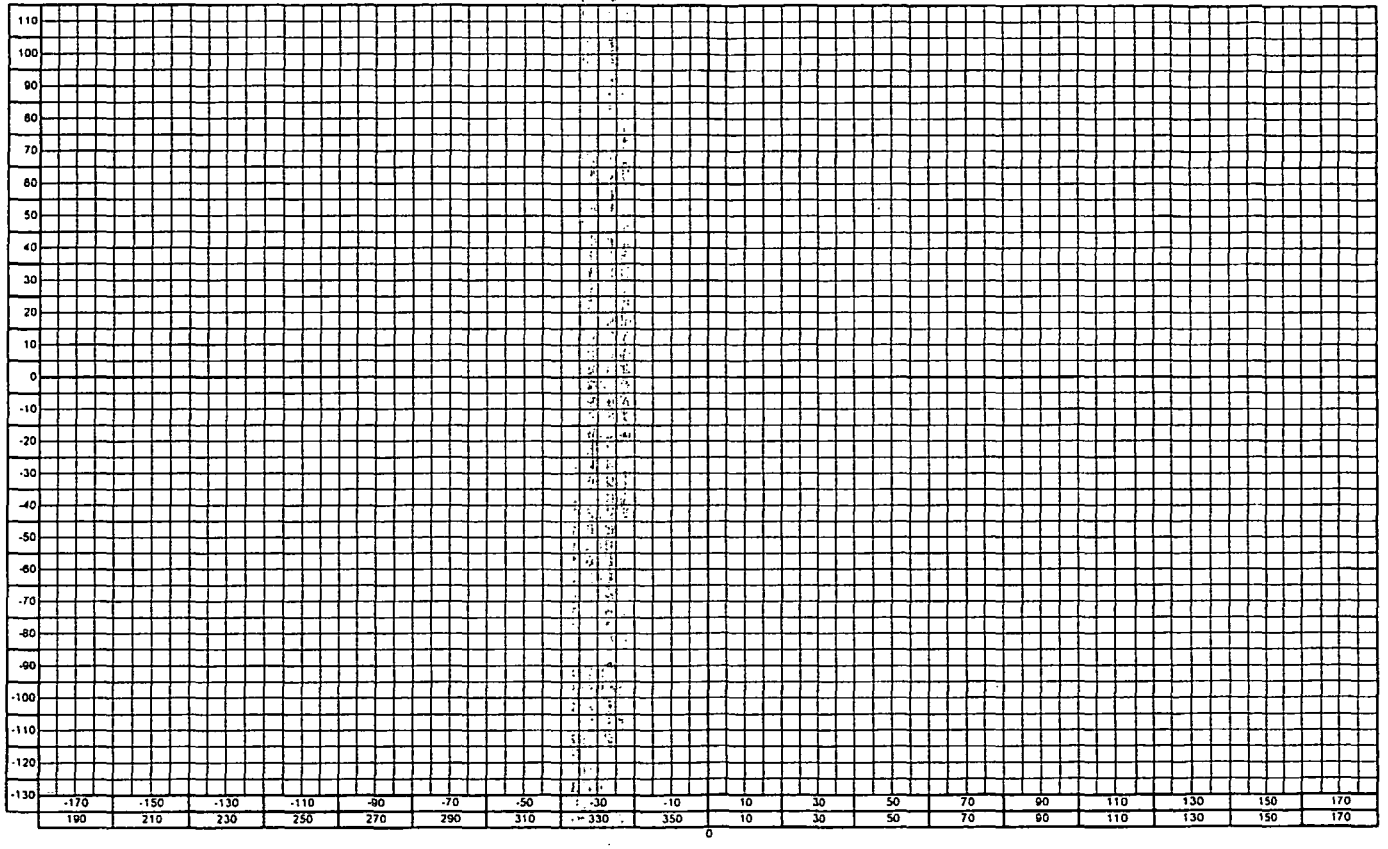

L-3 WESCAM 649 NORTH SERVICE ROAD W. BURLINGTON ONTARIO CANADA L7P 5B9
Phone : 905-633-4000 Fax : 905-633-4100

Approval : _____

Customer Signature

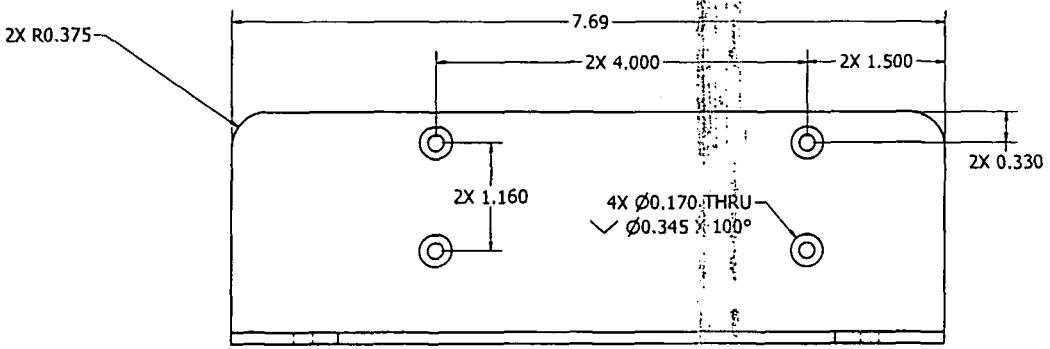

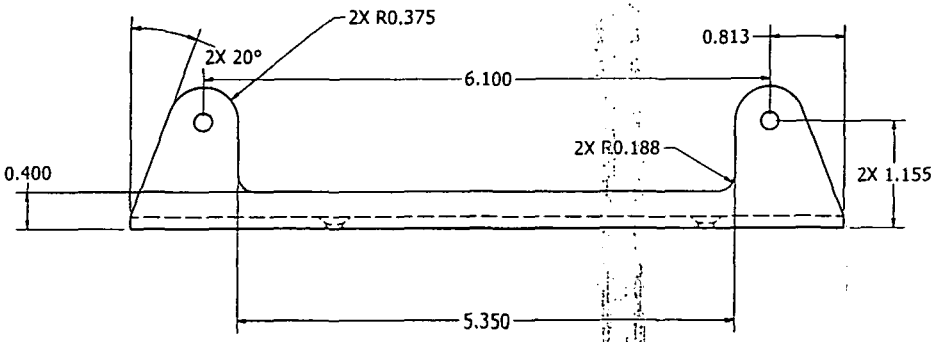

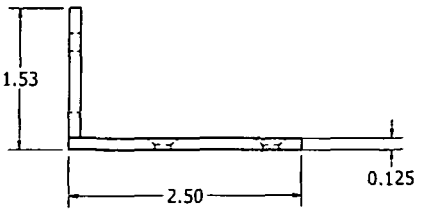

C206ARS-1000-21
MATERIAL: 6061-T6
FINISH: BLACK POLYESTER POWDER COAT CARDINAL P/N: C241-BK303

Paravion Technology Inc	TITLE C206 CHURCHILL ARS EQUIPMENT				DRAWING NUMBER C206ARS-1000
DIMENSIONS IN INCHES TOLERANCES EXCEPT WHERE NOTED .X = ±.1 .XX = ±.05 .XXX = ±.010 ANGLES = ± 1° THREADS INTERNAL: CLASS 2B EXTERNAL: CLASS 2A	DRAWN BY DGW	CHK'D BY	APRV'D BY	DATE 2/28/13	REV A / ECO
	3RD ANGLE PROJECTION	DO NOT SCALE DRAWING			SHEET 1 OF 12

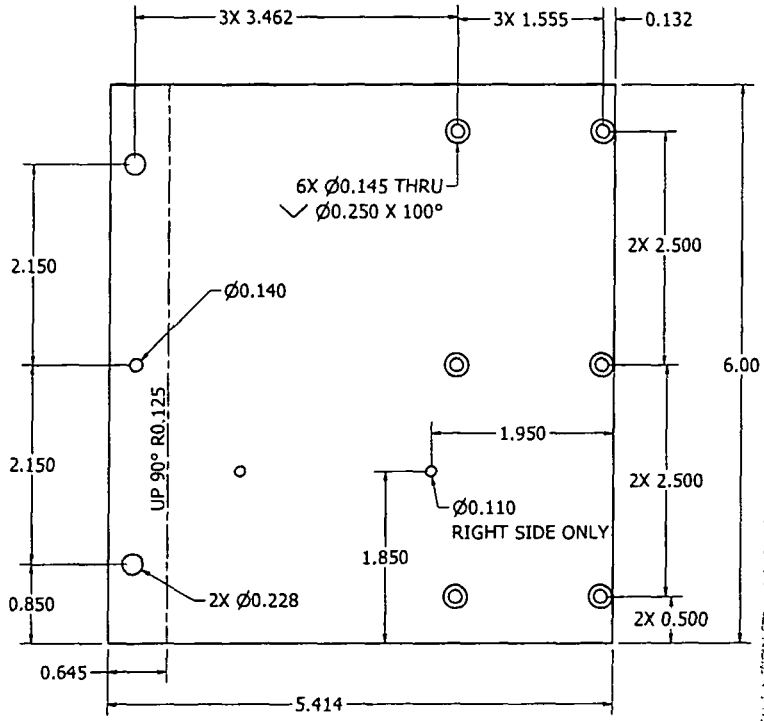

C206ARS-1000-13L/R
MATERIAL: 0.063" 6061-T6
FINISH: BLACK POLYESTER POWDER COAT CARDINAL
P/N: C241-BK303

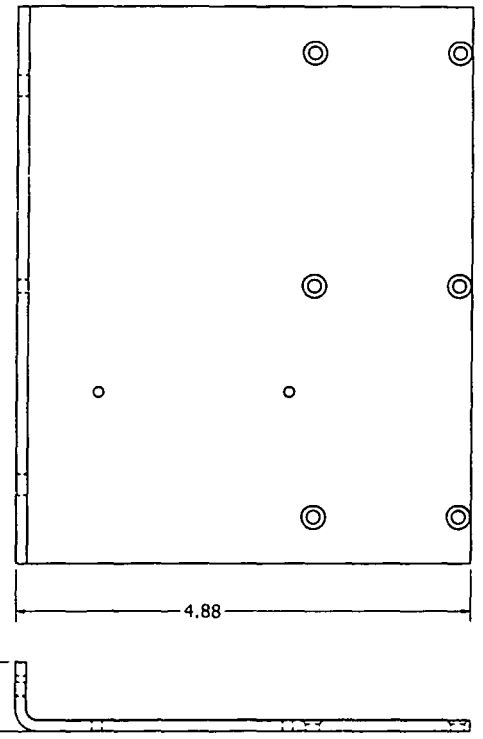

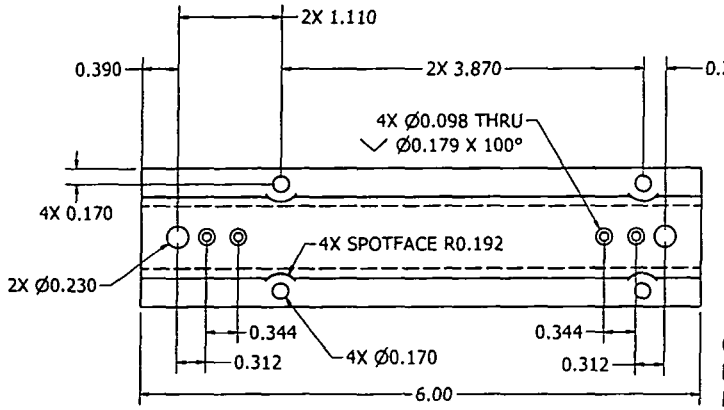

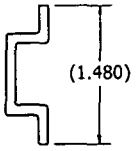

C205ARS-1000-18
MATERIAL: ES37200-1
FINISH: BLACK POLYESTER POWDER COAT CARDINAL
P/N: C241-BK303

Paravion Technology Inc	TITLE: C206 CHURCHILL ARS EQUIPMENT			DRAWING NUMBER: C206ARS-1000	
DIMENSIONS IN INCHES TOLERANCES EXCEPT WHERE NOTED .X = ±.1 .XX = ±.05 .XXX = ±.010 ANGLES = ± 1° THREADS INTERNAL: CLASS 2B EXTERNAL: CLASS 2A	DRAWN BY: DGW	CHKD BY	APPVD BY	DATE: 2/28/13	REV: A / ECO
	DO NOT SCALE DRAWING			SHEET 3 OF 12	
3RD ANGLE PROJECTION	© 2012 PARAVION TECH INC PARAVION IS A TRADEMARK OF PARAVION TECHNOLOGY INC				
-CONFIDENTIAL INFORMATION- THE INFORMATION AND DATA CONTAINED HEREIN IS PROPRIETARY AND IS SUBMITTED IN CONFIDENCE, AND SHALL NOT BE DISCLOSED, USED OR DUPLICATED FOR ANY PURPOSE WHATSOEVER WITHOUT THE PRIOR WRITTEN PERMISSION OF PARAVION TECHNOLOGY, INC.	HIGITO 4				

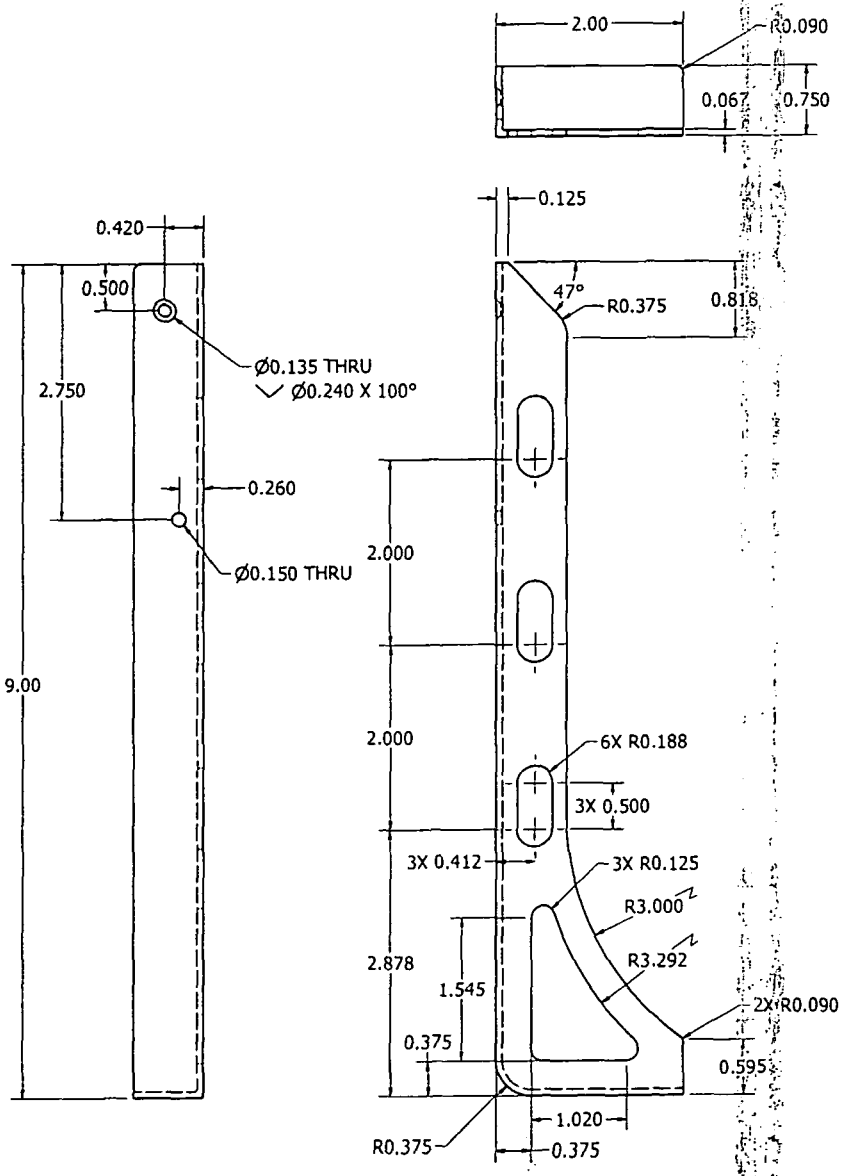

C206ARS-1000-15, -24
MATERIAL: 6061-T6
FINISH: BLACK POLYESTER POWDER COAT CARDINAL
P/N: C241-BK303
C206ARS-1000-19 MIRROR IMAGE

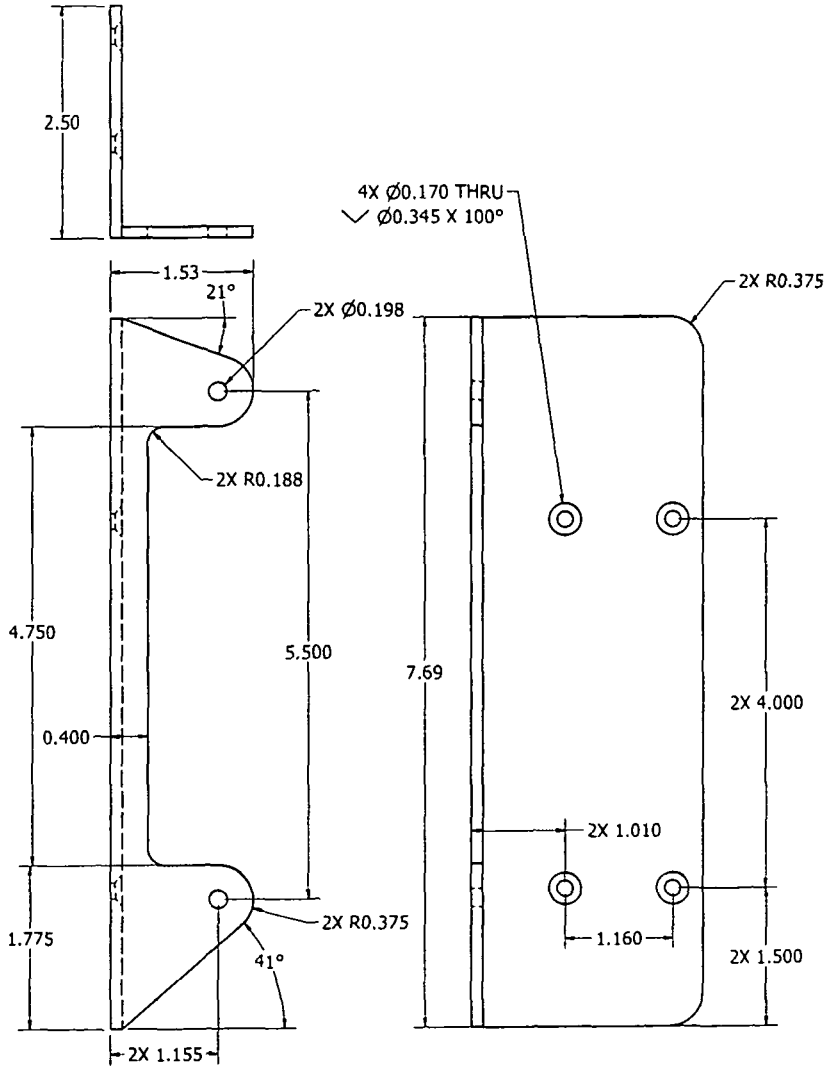

C206ARS-1000-16
MATERIAL: 6061-T6 0.125" THICK ANGLE
FINISH: BLACK POLYESTER POWDER COAT CARDINAL
P/N: C241-BK303

Paravion Technology Inc	TITLE: C206 CHURCHILL ARS EQUIPMENT			DRAWING NUMBER: C206ARS-1000	
DIMENSIONS IN INCHES TOLERANCES EXCEPT WHERE NOTED .X = ±.1 .XX = ±.05 .XXX = ±.010 ANGLES = ± 1° THREADS INTERNAL: CLASS 2B EXTERNAL: CLASS 2A	DRAWN BY: DGW	CHK'D BY	APPV'D BY	DATE: 2/28/13	REV: A / ECO
3RD ANGLE PROJECTION	DO NOT SCALE DRAWING			SHEET 5 OF 12	
PROTO 4	© 2012 PARAVION TECH INC. PARAVION IS A TRADEMARK OF PARAVION TECHNOLOGY INC.				

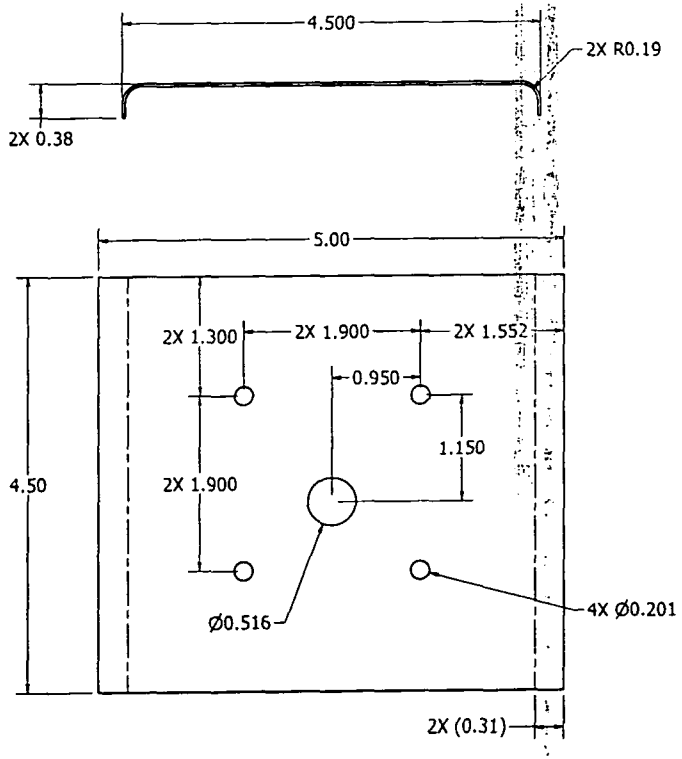

C206ARS-1000-25
MATERIAL: 6061-T6 0.032"
FINISH: BLACK POLYESTER POWDER COAT CARDINAL
P/N: C241-BK303

Paravion Technology Inc.	TITLE: C206 CHURCHILL ARS EQUIPMENT				DRAWING NUMBER: C206ARS-1000		
DIMENSIONS IN INCHES TOLERANCES EXCEPT WHERE NOTED .X = ±.1 .XX = ±.05 .XXX = ±.010 ANGLES = ± 1°	DRAWN BY: DGW	CHK'D BY:	APPV'D BY:	DATE: 2/28/13	REV: A	ECO:	
THREADS INTERNAL: CLASS 2B EXTERNAL: CLASS 2A	3RD ANGLE PROJECTION	DO NOT SCALE DRAWING			SHEET 7 OF 12		
		© 2012 PARAVION TECH. INC. PARAVION IS A TRADEMARK OF PARAVION TECHNOLOGY INC.					

PAGE(S) 4

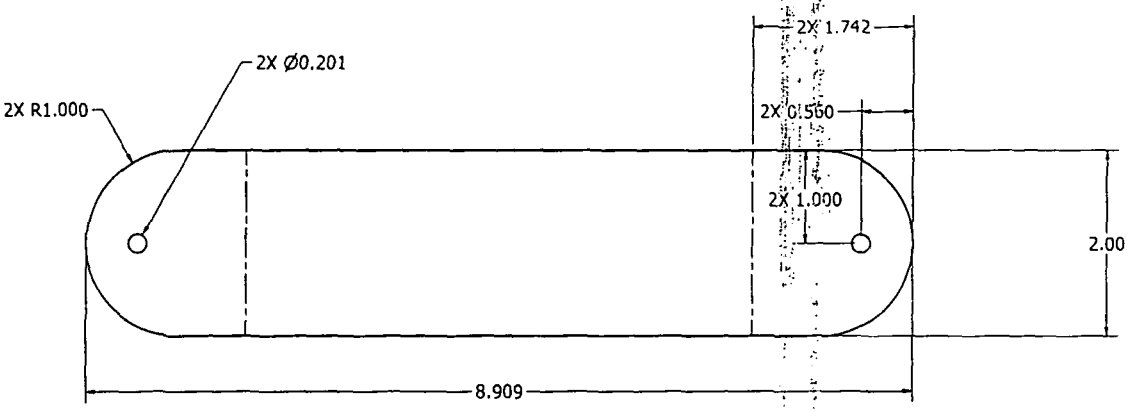

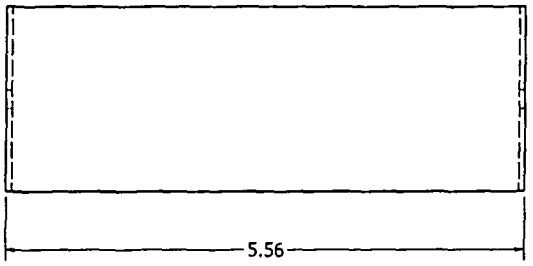

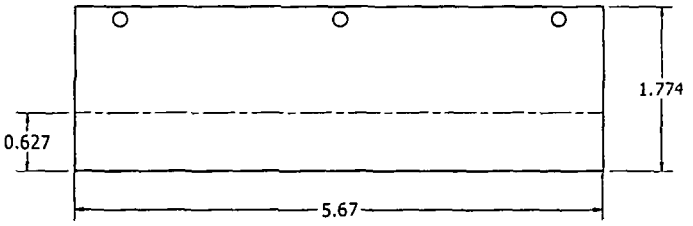

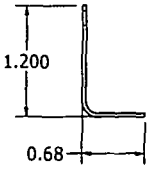

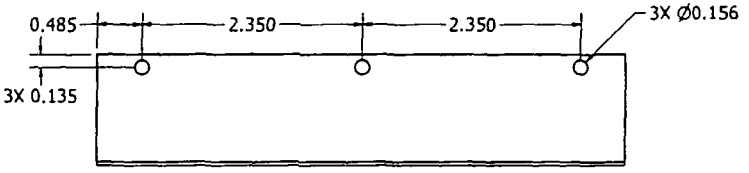

-28
MATERIAL: 6061-T6 0.063" SHEET
BEND RADII: 0.125"
FINISH: BLACK POLYESTER POWDER COAT CARDINAL
P/N: C241-BK303

-29
MATERIAL: 6061-T6 0.040" SHEET
BEND RADII: 0.125"
FINISH: BLACK POLYESTER POWDER COAT CARDINAL
P/N: C241-BK303

Paravion Technology Inc

TITLE: C206 CHURCHILL ARS EQUIPMENT

DRAWING NUMBER: C206ARS-1000

DRAWN BY	CHK'D BY	APPV'D BY	DATE	REV	ECO
DGW			2/28/13	A	

DIMENSIONS IN INCHES
TOLERANCES EXCEPT WHERE NOTED
.X = ±.1
.XX = ±.05
.XXX = ±.010
ANGLES = ± 1°

THREADS
INTERNAL: CLASS 2B
EXTERNAL: CLASS 2A

3RD ANGLE PROJECTION

DO NOT SCALE DRAWING

SHEET 9 OF 12

MOTU 4

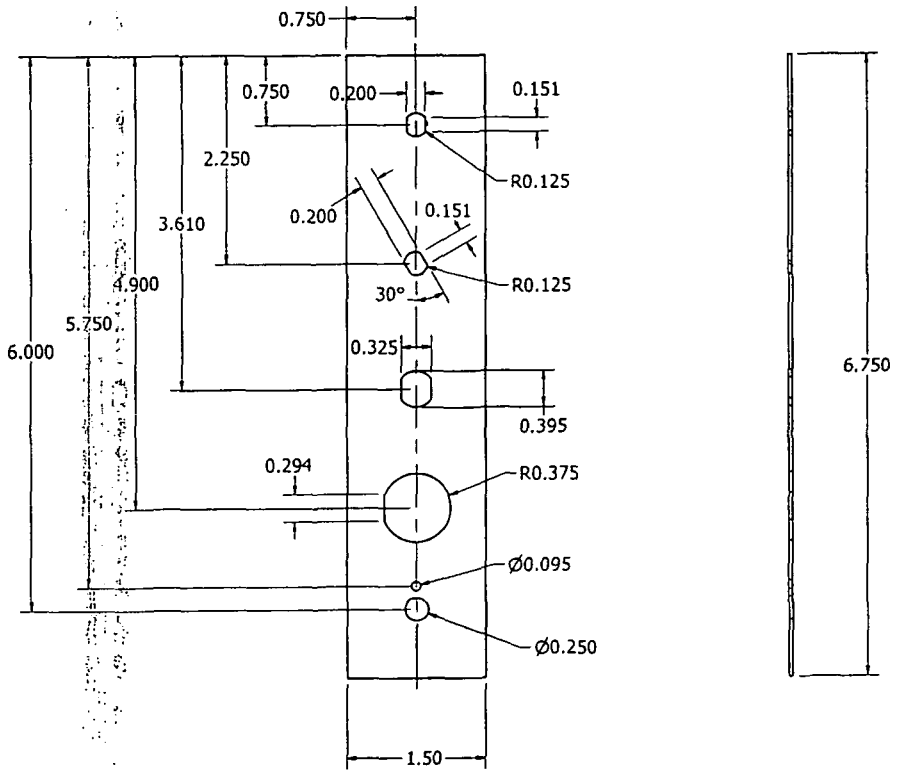

-31
MATERIAL: 6061-T6 0.040" SHEET
FINISH: BLACK POLYESTER POWDER COAT CARDINAL
P/N: C241-BK303

Paravion Technology Inc.	TITLE: C206 CHURCHILL ARS EQUIPMENT				DRAWING NUMBER: C206ARS-1000
DIMENSIONS IN INCHES TOLERANCES EXCEPT WHERE NOTED .X = ±.1 .XX = ±.05 .XXX = ±.010 ANGLES = ± 1° THREADS INTERNAL CLASS 2B EXTERNAL CLASS 2A	DRAWN BY: DGW	CHKD BY	APPVD BY	DATE: 2/28/13	REV: A / ECO
	3RD ANGLE PROJECTION	DO NOT SCALE DRAWING			SHEET 11 OF 12
-CONFIDENTIAL INFORMATION- THE INFORMATION AND DATA CONTAINED HEREIN IS PROPRIETARY AND IS SUBMITTED IN CONFIDENCE, AND SHALL NOT BE DISCLOSED, USED OR DUPLICATED FOR ANY PURPOSE WHATSOEVER WITHOUT THE PRIOR WRITTEN PERMISSION OF PARAVION TECHNOLOGY, INC.	PROTO 4	© 2012 PARAVION TECH. INC. PARAVION IS A TRADEMARK OF PARAVION TECHNOLOGY INC.			

Bill of Materials

*IR-440-1, REV. N/C

ITEM #	P/N	DESCRIPTION	QTY	TYP
0	*IR-440-1, REV. N/C	GIMBAL ADAPTER ASSY	1	KIT
1	IR-606-1	SUPPORT PLATE	4	EA
2	MS16998-44	BOLT	4	EA
3	NAS1149C0463R	WASHER	1	EA
4	MS24693S279	SCREW	1	EA
5	NAS43DD3-32FC	SPACER	1	EA
6	NAS1149F0332P	WASHER	1	EA
7	MS21042L3	NUT	1	EA

The installation is to be inspected in accordance with the following criteria or equivalent operator's Approved Airworthiness Inspection Program:

1.0 INTRODUCTION

These Instructions for Continued Airworthiness contain the necessary information for carrying out the ongoing maintenance and inspections on the installation of an IR-605-1 Support Plate on a Cessna 206 aircraft in accordance with FAA Form 337 dated _____.

2.0 DESCRIPTION

Paravion Technology drawing IR-605 describes the support plate used as provisions for a Wecam MX-10 camera. The plate is installed in the belly of the aircraft at approximately the center of the fuselage along the centerline of the aircraft. It weighs approximately 1.6 lbs and is installed using 4 x NAS1351C4 screws.

3.0 CONTROL, OPERATION INFORMATION

N/A

4.0 SERVICING INFORMATION

N/A

5.0 MAINTENANCE INSTRUCTIONS

The inspection program for this installation consists of a 12-month annual inspection for the condition of the support plate and associated components. This inspection is a complete visual inspection requiring only a single logbook entry.

12-Month Inspection

A. Inspect condition of support plate and all associated mounting structure for loose hardware or damage, i.e. bent, cracked or dented structures, and repair or replace as necessary.

The 12-month inspections shall be accomplished by an appropriately rated mechanic assigned to this aircraft and can be accomplished earlier to match up with other aircraft inspections.

6.0 TROUBLESHOOTING

N/A

7.0 REMOVAL AND REPLACEMENT INSTRUCTIONS

A. Paravion Technology drawing IR-605 (provided) shows the details of the support plate and report number ER-C206ELP-2 shows the installation of the plate and can be used as a reference in the event the plate needs to be removed and replaced.

8.0 DIAGRAMS

N/A

US Department of Transportation
Federal Aviation Administration

MAJOR REPAIR AND ALTERATION
(Airframe, Powerplant, Propeller, or Appliance)

Form Approved OMB No. 2120-0020 2/28/2011

Electronic Tracking Number

For FAA Use Only

INSTRUCTIONS: Print or type all entries. See Title 14 CFR §43.9, Part 43 Appendix B, and AC 43.9-1 (or subsequent revision thereof) for instructions and disposition of this form. This report is required by law (49 U.S.C. §44701). Failure to report can result in a civil penalty for each such violation. (49 U.S.C. §46301(a))

1. Aircraft	Nationality and Registration Mark: N959JT	Serial No.: T20608983	
	Make: Cessna	Model: T206	Series:
2. Owner	Name *(As shown on registration certificate)*: PSL Surveys	Address *(As shown on registration certificate)*: Address PO Box 756; City Bristow; State VA; Zip 20136; Country USA	

3. For FAA Use Only

The technical data identified herein has been found to comply with the applicable airworthiness requirements and is hereby approved for use only on the above described aircraft, subject to conformity inspection by a person authorized in CFR title 14, Part 43, section 43.7.
Approving Inspector: Julie L Summer Date: 3/29/2013
Denver FSDO, NM-03

4. Type		5. Unit Identification			
Repair	Alteration	Unit	Make	Model	Serial No.
☐	☐	AIRFRAME	—	*(As described in Item 1 above)*	—
☐	☐	POWERPLANT			
☐	☐	PROPELLER			
☐	☐	APPLIANCE	Type / Manufacturer		

6. Conformity Statement

A. Agency's Name and Address	B. Kind of Agency	
Name: Philip Glasgow	✓ U. S. Certificated Mechanic	☐ Manufacturer
Address: 2533 Dallas Creek Court	☐ Foreign Certificated Mechanic	C. Certificate No.
City: Fort Collins State: Co	☐ Certificated Repair Station	
Zip: 80528 Country: USA	☐ Certificated Maintenance Organization	A&P 3292572 IA

D. I certify that the repair and/or alteration made to the unit(s) identified in item 5 above and described on the reverse or attachments hereto have been made in accordance with the requirements of Part 43 of the U.S. Federal Aviation Regulations and that the information furnished herein is true and correct to the best of my knowledge.

Extended range fuel per 14 CFR Part 43 App. B ☐

Signature/Date of Authorized Individual: Philip Glasgow 4/2/13

7. Approval for Return to Service

Pursuant to the authority given persons specified below, the unit identified in item 5 was inspected in the manner prescribed by the Administrator of the Federal Aviation Administration and is ☒ Approved ☐ Rejected

BY								
	☐	FAA Flt. Standards Inspector	☐	Manufacturer	☐	Maintenance Organization	☐	Persons Approved by Canadian Department of Transport
	☐	FAA Designee	☐	Repair Station	✓	Inspection Authorization		Other *(Specify)*

Certificate or Designation No.: A&P 3292572 IA

Signature/Date of Authorized Individual: Philip Glasgow 4/2/13

FAA Form 337 (10-06)

NOTICE

Weight and balance or operating limitation changes shall be entered in the appropriate aircraft record. An alteration must be compatible with all previous alterations to assure continued conformity with the applicable airworthiness requirements.

8. Description of Work Accomplished
(If more space is required, attach additional sheets. Identify with aircraft nationality and registration mark and date work completed.)

N959JT	4/2/13
Nationality and Registration Mark	Date

-Installed a Paravion Technology Inc Infared camera mounting provisions IAW STC STC SA 00295DE for a L3 Wescam MX10 camera system.

-Installed a Churchill Augmented Reality System IAW manufacturers installation drawings # ARS 500C-201210 Rev 6 10/24/12. Power is supplied from the avionics buss and is protected using a Klixon C/B P/N 7277-2-3 labeled "Mapping" Mounted the ARS system to the above installed Infrared camera mount and secured the ARS to the mount by fabricating 2 X support brackets. Ref Paravion Technology drawing 206ARS-1000 sheet 1 for full fabrication details. Mounted the GPS antenna to the roof of the aircraft structure at station 104.0 using manufacturer provided hardware.

-Mounted a 9.0"Airborne display monitor into the instrument panel. The primary display monitor is mounted to the instrument panel on the R/H side using 2X MS24693-363 screws. Attached 2X MS21059-L3 nut plates to the instrument panel using 4 X MS21426-3-4 countersunk rivets. The remote control unit is provided power from the avionics buss and is protected using a 3 Amp Klixon C/B P/N 7277-2-3. And is labeled "Monitor ". The remote control unit for the monitor is mounted to aircraft structure behind the instrument panel. Attached the control unit to the support brackets using 4 X screws P/N MS24693S26 and 4 X clip nuts P/N 294667. Fabricated the two supports from stock 6061 T6 aluminium and machined the support brackets. Ref Paravion Technology drawing 206ARS-1000 sheet 5 for fabrication details. Attached the support brackets to the instrument panel using 4 X screws P/N and 4 X nutplates P/N which are riveted to the support brackets using 8 X MS20426AD3-5 rivets. Fabricated a support brace from 6061 T6 aluminium 0.063" and bent to a 90 deg angle. Attached the brace to the supports using 2 X nutplates P/N MS21059L06 and 2 X screws P/N MS24693S26. Fabricated a plate for the remote control controls from 6061 T6 aluminum 1.5" X 4". Secured the power switch, dimmer switch, menu control switch, Video selection switch & the Downlink switch to this panel using the manufacturers provided switches. Secured the panel to the arm rest of the interior plastic using 4 X MS35206-226 screws, 4 X AN 960-6L washers & 4 X MS21083N06 nuts.

-Mounted The Janteq Downlink Control ECU to the floor at station 133.75 using 4 X MS27039-1-09 screws. Attached 3 X nut plates P/N MS2105L3N and attached to the existing structure using 6 X CR3213 4-4 rivets. Fabricated a doubler from 6061 T6 .063" 8.5" X .7 X.7 angle. Attached two of the afore mentioned nut plates to this doubler using the rivets mentioned above. Installed the Janteq Down link IAW manufacturers Dwgs . System is protected using a Klixon C/B switch P/N 7270-3-10 and is labeled "Down Link" Mounted two antennas on the bottom of the aircraft. Mounted the first antenna at station 150.0" on the bottom of the aircraft to the R/H side of the aircraft center line. Fabricated a doubler from 6061 T6 aluminium 4" X 5". Attached the antenna to the aircraft using 4 X P/N MS51987-48 screws, 4 X P/N AN960C8 washers & 4 X P/N MS21042-L08 nuts. Mounted the second antenna to the bottom of the aircraft at station 159.0" to the L/H side of the center line. Fabricated a doubler from 6061 T6 aluminium 4" X 5". Attached the antenna to the aircraft using 4 X P/N MS51987-48 screws, 4 X AN960C8 P/N washers & 4 X P/N P/N MS21042-L08 screws. Mounted the control head to the center console using 4 X P/N 2-56 screws. Fabricated a double and machined to fit. ref Paravion Technology Dwg C206ARS-1000 sheet 11 for fabrication details.

-Installed 2 X Aux Foot switches on the floor at station location 20.00". Fabricated foot switch holder form the same material as mentioned above for the center console and installed a 2 X switches P/N M8805/55-001 X 2. Attached the Foot switch housing Using 2 x MS35206-228 screws and 2 X AN960JD6L washers. to the floor using 3 X Nut plates P/N MS21075L06 & 1 X MS21069L06 nut plate. Attached the nut plates to the floor using 8 X MS20426AD3-3.5 Rivets.

☑ Additional Sheets Are Attached

NOTICE

Weight and balance or operating limitation changes shall be entered in the appropriate aircraft record. An alteration must be compatible with all previous alterations to assure continued conformity with the applicable airworthiness requirements.

8. Description of Work Accomplished
(If more space is required, attach additional sheets. Identify with aircraft nationality and registration mark and date work completed.)

N959JT	4/2/13
Nationality and Registration Mark	Date

-Fabricated a breaker panel from .25" X 6.5" X 6.5" stock. Machined the required holes and location for the various connectors required. fabricated 2 X angles form .040" 6.5"X .75" X 1.25" 6061 T6 aluminium. Attached the angles to the breaker panel using 6 X screws P/N MS24693S26. Attached the assembly to the airframe using 4 X screws P/N MS24693S26. Attached 4 X nut plates P/N MS21069L06 to the existing structure using 8 X MS20426AD-3-4 rivets. Ref Paravion Technology Dwg C206ARS-1000 sheet 8 for fabrication details.

- Fabricated a carbon fiber housing to mount 2 X USB ports and 1 X hand controller cannon plug. Attached the housing to the aircraft structure on the floor between the seats at station 55.0 just aft of the existing vent using 4 X MS21075L3N nut plates. Attached the nut plates to the the floor using 4 X MS20426-3-4 countersunk rivets. used 4 X screws P/N MS27039-1-09 screws and 4 X AN960C10L washers. Ref attached Paravion Technology dwg C206ARS-1000 sheet 10 for fabrication details of the housing.

- Fabricated a mount for the existing Motorola XTVA radio housing form .063 6061 T6 aluminium 9" X 2". Attached the mount to the floor aft of the USB housing at station 65.0 using 2 X MS21075L3N nut plates. Attached the nut plates to the the floor using 4 X MS20426-3-4 countersunk rivets. used 2 X screws P/N MS27039-1-09 screws and 2 X AN960C10L washers. Ref Paravion Technology drawing C206ARS-1000 sheet 9 for fabrication details.

Wire gauge selection was done in accordance with AC43-13-1B Chapter 11, Aircraft Electrical System, section 5 (wiring rating) paragraphs 11-66, 11-67 section 6 (Aircraft Electrical Wire section) paragraphs 11-76, 11-77.

An electrical load does not exceed limitations of AC43-13-1b Chapter 11, paragraphs 424 (Electrical load limits), 425 (generator) and 428 (determination of electrical load).

The Instructions for Continued Airworthiness (ICA) contained in the Flight Standards Handbook Bulletin for Airworthiness (HBAW-8900.1) are not applicable as these components are not field repairable and are "Remove and Replace" items only.

Aircraft weight & balance and equipment list amended as required.

---------- Nothing follows ----------

☑ Additional Sheets Are Attached

United States of America

Department of Transportation—Federal Aviation Administration

Supplemental Type Certificate

Number **SA00295DE**

This certificate, issued to **Paravion Technology, Inc.**
2001 Airway Avenue
Fort Collins, CO 80524

certifies that the change in the type design for the following product with the limitations and conditions therefor as specified hereon meets the airworthiness requirements of Part 3 *of the* Civil Air *Regulations.*

Original Product—Type Certificate Number: A4CE
Make: Cessna Aircraft Company
Model: TU206G, 206H, & T206H

Description of the Type Design Change:
Installation of an external Infrared Imaging System in accordance with Paravion Technology Master Drawing List Report No. DL-C206IR-100, Revision N/C, dated March 29, 1997 or later FAA approved revision.

Limitations and Conditions:

1. This approval should not be extended to aircraft of this model on which other previously approved modifications are incorporated unless it is determined that the interrelationship between this change and any of those other previously approved modifications, including changes in type design, will introduce no adverse effect upon the airworthiness of that aircraft.
2. A copy of this Certificate and Flight Manual Supplement must be maintained as part of the permanent records for the modified aircraft.
3. FAA approved Aircraft Flight Manual Supplement PR-C206IR-100M, Revision 0, dated June 11, 1997 or later FAA approved revision is required.
4. If the holder agrees to permit another person to use this certificate to alter the product, the holder shall give the other person written evidence of that permission.

This certificate and the supporting data which is the basis for approval shall remain in effect until surrendered, suspended, revoked, or a termination date is otherwise established by the Administrator of the Federal Aviation Administration.

Date of application: January 10, 1997 *Date reissued:*

Date of issuance: June 12, 1997 *Date amended:* April 8, 2004

By direction of the Administrator

Melissa Sandow, *(Signature)* Small Airplane Program Manager
Northwest Mountain Region
Denver Aircraft Certification Office
(Title)

Any alteration of this certificate is punishable by a fine of not exceeding $1,000, or imprisonment not exceeding 3 years, or both.

This certificate may be transferred in accordance with FAR 21.47.

FAA Form 8110-2(10-68)

PARAVION TECHNOLOGY, INC.
2001 AIRWAY AVENUE
FT. COLLINS, COLORADO 80524

REPORT NO. PR-C206IR-900M

INSTALLATION INSTRUCTIONS

FOR

INFRARED IMAGING SYSTEM

REVISIONS

REV.	DATE	DESCRIPTION	BY
N/C	11/02/00	Original	MR
A	05/18/01	Added Video Output Note.	MR
B	09/06/02	Added reference to C206IR-101-2 Support Installation, section 2.1.1.	GP
C	10/25/04	Section 2.1.1 added reference to FLIR U8000, U8500 Section 2.1.3 re-worded to clarify doubler installation Added Table 2.2, other minor wording changes to clarify	REB
D	01-07-05	Section 2.2.10 edited to include assembly of Item 33 Doubler and Item 26 beam Assembly.	REB
E	12/06/05	Sect. 2.1.8, page 1 was "... Remove fasteners which conflict with angle installation. Adjust clamps to support tube in center of opening and level tube to cabin floor." Clarified to indicate positioning laterally and longitudinally.	REB

TABLE OF CONTENTS

1.0 INTRODUCTION

This document provides a step-by-step procedure for installation of the C206IR-100 Infrared Camera System Installation in the Cessna 206 Aircraft. The instructions contained herein are intended to supplement the information contained on the installation drawings.

2.0 INSTALLATION PROCEDURES

2.1 Support Installation (Drawing C206IR-101)

2.1.1 If your camera system has a dual power/control cable from the gimbal to the electronic control unit (Ref. FLIR MK-I and MK-II) then use C206IR-101-1. If your camera system has a single power/control cable from the gimbal to the electronic control unit (Ref. FLIR MK-III, U7000 and U7500, U8000, U8500) then use C206IR-101-2.

2.1.2 Remove baggage floor covering and all necessary side panels.

2.1.3 Verify location of doubler between longitudinal stringers in baggage compartment area and trim doubler/shim as necessary. Mark location of doubler on fuselage and remove all conflicting fasteners. Match drill doubler to existing fastener holes. Locate and drill additional fastener holes per drawing. Remove doubler, de-burr holes and install using indicated hardware.

2.1.4 Locate and drill indicated hole through both fuselage and doubler as shown, de-burr. Install rivets around hole through fuselage and doubler.

2.1.5 Adhere extrusion to circumference of opening.

2.1.6 Temporarily clamp angles to support assembly.

2.1.7 Position clamped support assembly in aircraft through hole and perpendicular to aircraft centerline.

2.1.8 Remove fasteners which conflict with angle installation. Adjust clamps to center the tube in the previously drilled opening and parallel to the baggage compartment floor (laterally). The support tube longitudinal angle should be set by leveling the Electronic Control Unit Mount Bracket to the cabin floor, not to the baggage compartment floor. **CAUTION:** The C206IR-2500-1 Spacer (if used) and IR-1030-1 Angle are not symmetrical. Note correct orientation of parts before drilling baggage compartment floor.

2.1.9 Mark and match drill floor to support angles, remove clamped assembly.

2.1.10 Temporarily install indicated beam Assembly and support angles as shown. Match mark the beam for angles installation. Attach the angles to the beam in accordance to the drawing and temporarily re-install the assembly. Match drill the Beam Assembly to the previously drilled floor. Remove the beam Assembly and install the indicated Doubler (Nut Plate Assembly) using indicated fasteners(**NOTE:** It will be necessary to

trim the width of the doubler to fit inside the beam). Permanently install the beam Assembly using indicated hardware.

2.1.11 Match drill support legs to angles and secure using indicated hardware.

2.1.12 Reinstall support assembly by securing angles through spacer(optional if needed to adjust height) into the installed fastener assemblies in floor using indicated hardware.

2.1.13 Reinstall floor covering and fairing, trimming as necessary.

2.1.14 Install placard in a conspicuous location near existing baggage weight limits placard.

2.1.15 Optional use of MIL-S-8802F Class B2 sealant and DC4 or equivalent products, as indicated, may be desirable.

2.1 Equipment Cabinet Installation (Drawing C206IR-201)

2.2.1 Aircraft built prior to 1997 incorporate a lighter seat rail and require use of the C206IR-201-1 installation. The heavier seat rails in post-1997 aircraft require use of the C206IR-201-2 installation.

2.2.2 The equipment cabinet mount plate assembly may be installed to the seat rail pair in place of the copilot seat.

NOTE: See Table 2.2 for available Mount Plate options

TABLE 2.2; EQUIPMENT CABINET MOUNT PLATE INSTALLATIONS

Aircraft Mfr. Date	C206IR-201-1 Equipment Cabinet Installation	C206IR-201-2 Equipment Cabinet Installation
Pre-1997	C182IR-2500-1 Mount Plate Assy. Optional C182IR-2500-3 Assy.	
1997 and Later		C182IR-2500-2 Mount Plate Assy. Optional C182IR-2500-4 Assy.

2.2.3 Install Mount Plate Assembly to rail pair in desired location by sliding clamps onto rails. Mark locations for seat pin assemblies and remove to drill indicated holes.

2.2.4 Reinstall mount plate assembly to rail, slide clamps tight against rails and tighten screws.

2.2.5 Secure FWD/AFT movement by installing seat pin assemblies in drilled holes.

2.2.6 Install cabinet by inserting studs on bottom of cabinet into slots in the Mount Plate assembly and slide forward to small end of slot. Secure by inserting bolt through Mount Plate assembly and into cabinet nut plate.

2.2.7 Assure all fasteners are securely installed.

NOTE: Weight and balance data must be adjusted in accordance with actual weights and locations of installed equipment.

2.2 Equipment Installation (Drawing C206IR-251)

NOTE: All video outputs to any monitors should come from the VCR if installed.

The monitor and electronics support module (EU) installations are addressed by this drawing.

The equipment cabinet installation is designed to carry up to 25 lb. The equipment mounting bracket for the electronics support module is provided on the C206IR-1010-2 support assembly.

2.3.1 Monitor Installation:

2.3.1.1 The swivel support is designed to carry the Inframetrics monitor. Other monitor installations may require different mounting provisions and separate approval.

2.3.1.2 Remove the top cover of the monitor, then drill and install plate nuts on each side using the indicated rivets.

NOTE: Cover monitor assembly when modifying top cover to keep foreign material out. Reinstall monitor cover.

2.3.1.3 Adhere extrusion to perimeter of monitor glare shield using indicated adhesive.

2.3.1.4 Using indicated hardware, install the swivel support assembly to the monitor.

2.3.1.5 Place the monitor assembly on the top of the equipment cabinet, and secure using indicated hardware.

2.3.2 Electronics Unit Installation:

2.3.2.1 Install IR-2000-1 buttons to EU using indicated hardware.

2.3.2.2 Remove the clip from the rail assembly of EU mount.

2.3.2.3 Move the sliding shafts away from the keyholes in the rail assembly.

2.3.2.4 Fit the buttons on the EU into the keyways, and slide them into the keyway slots.

2.3.2.5 Move the sliding shafts against the EU and tighten the lock knobs. Replace the clip.

NOTE: Weight and balance calculations must include installed equipment.

2.4 Power Supply Wiring (Drawing C206IR-301)

2.4.1 Refer to drawing and camera system specification data for cable identification and connection.

2.4.2 Remove panels as necessary.

2.4.3 Install indicated circuit breaker in available aircraft breaker panel position. Provide electrical power through avionics buss.

2.4.4 Locate unused rocker type switch in lighting panel for use as infrared on/off switch.

2.4.5 Route power cable to electronics unit from infrared on/off switch. General cable routing should follow existing electrical wiring.

2.4.6 When system is installed for use, loose cables should be routed under seats and otherwise secured.

2.4.7 When system is disabled or removed, loose cables and controls must be stowed or removed.

SEQ No. 12JM003PA

U.S. DEPARTMENT OF TRANSPORTATION FEDERAL AVIATION ADMINISTRATION STATEMENT OF COMPLIANCE WITH AIRWORTHINESS STANDARDS			1. DATE 12/28/2012
AIRCRAFT OR AIRCRAFT COMPONENT IDENTIFICATION			
2. MAKE Cessna Aircraft Company	3. MODEL NO. 206	4. TYPE *(Airplane, Radio, Helicopter, etc,.)* Airplane	5. NAME OF APPLICANT Paravion Technology Inc.

LIST OF DATA

6. IDENTIFICATION	7. TITLE
Paravion Technology Drawing IR-605 Rev A dated 11/13/2012	Support Plate
Paravion Technology Document ER-C206ELP-2 (MX-10 Installation) Rev 4 dated 12/21/2012	Structural Analysis for Wescam MX-10 Installation Using 206IR-101 Support Installation & IR-605 Support Plate

Notes:

1. Only structural aspects of the above data are approved herein. This approval is for engineering design data only and is not an installation approval. It indicates the data listed above demonstrates compliance with the regulations specified by paragraph and subparagraph listed below as 'APPLICABLE REQUIREMENTS'. **(Compliance to additional regulations not listed here may be required).** This form does not constitute FAA approval of all engineering data necessary for substantiation of compliance to necessary requirements for the entire alteration/repair.
2. This approval is valid for Cessna Aircraft Company Model 206 S/N T20608983

8. PURPOSE OF DATA

Submittal of data in support of FAA Major Alteration

9. APPLICABLE REQUIREMENTS (List specific sections)

14 CFR 23.301, 23.303, 23.305(a), 23.307(a), 23.337(a), 23.601(a), 23.603, 23.605(a), 23.607(a), 23.609(a)(2), 23.611, 23.613, & 23.625(a).

10. CERTIFICATION -Under authority vested by direction of the Administrator and in accordance with conditions and limitations of appointment under 14 CFR Part 183 of the Federal Aviation Regulations, data listed above and on attached sheets numbered __2__ have been examined in accordance with established procedures and found to comply with applicable requirements of the Federal Aviation Regulations.

I Therefore Recommend approval of these data

X Approve these data

11. SIGNATURES(S) OF DESIGNATED ENGINEERING REPRESENTATIVE(S)	12. DESIGNATION NUMBERS(S)	13. CLASSIFICATION(S)
Joe Musco	DERT-605388-NM	Structures

SEQ No. 12JM003PA

Applicable Requirement Amendment Levels:

FAR	Title	Amdt.
23.301	Loads	23-42
23.303	Factor of safety	-
23.305(a)	Strength and deformation	-
23.307(a)	Proof of structure	-
23.337(a)	Limit maneuvering load factor	-
23.601(a)	Design	-
23.603	Materials	-
23.605(a)	Fabrication methods	-
23.607(a)	Fasteners	-
23.609(a)(2)	Protection of structure	-
23.611	Inspection provisions	23-7
23.613	Material strength properties and design values	-
23.625(a)	Fitting factors	-

FLAMMABILITY REPORT, TEST, AND TEST RESULTS

PARAVION TECHNOLOGY, INC.
2001 AIRWAY AVENUE
FORT COLLINS, CO 80524

LOG OF REVISIONS

Revision	Date	Description	By
0	3/15/2013	Original	Douglas White
1	4/8/2013	Added test results	Douglas White

TABLE OF CONTENTS

1. PURPOSE

This report defines the plan for the testing of a carbon fiber composite material, which will be used in the center console of a Cessna 206 aircraft. Upon completion of testing, this document will be revised to include test results and supporting data.

2. REGULATORY REQUIREMENTS

The flammability requirement for a composite console installed in compartment interiors, as defined in the certification basis for the Cessna 206, is as follows (Ref. TCDS 3A13):

14 CFR 23.853, Amendment 23-62:

Compartment interiors

For each compartment to be used by the crew or passengers:

(a) The materials must be at least flame-resistant

To meet this requirement, testing will be conducted in accordance with Part 25 Appendix F paragraph (a)(1)(ii), 12-second vertical .

3. TEST ARTICLE CONFIGURATION

The components to be qualified are manufactured from a carbon fiber resin composite, configured as follows:

- 1x1 Plain Weave Carbon (visible layer) – from CST
- 2x2 Twill 3K Carbon (inner layers) – from US composites
- LAM-135-FR Resin – from Pro-set
- LAM-229 Hardener – from Pro-set

In accordance with Appendix F of Part 25, the test articles will be cut from stock material, without finished or protected edges, representative of the actual cross-section and thickness of the part as installed in the aircraft.

The overall size of the specimen will be 3 inches wide and 13 inches long, exposing an area 2 inches wide and 11 inches long to the flame. Three specimens will be tested.

4. TEST FACILITY AND EQUIPMENT

The test facility is located at Centennial Aircraft Interiors Annex, 12559 E. Broncos Pkwy, Centennial, CO 80112. The following equipment will be used to perform the

flammability tests described in this document. The Vertical Flammability Test Cabinet meets the requirements of 14 CFR Part 25, Appendix F, Part I, Section (b)(3) and DOT/FAA/AR-00/12, Aircraft Materials Fire Test Handbook.

Equipment Nomenclature	Model Number	Manufacturer
Conditioning Chamber	Stabil-Therm Laboratory Oven	Blue M Electric Co. Blue Island, IL
Vertical Flammability Test Cabinet	7633A	United States Testing Co., Inc. Hoboken, NJ

5. TEST ARTICLE CONDITIONING

The test articles will be conditioned to 70° ± 5°F and at 50% ± 5% relative humidity until moisture equilibrium is reached or for 24 hours. Each specimen must remain in the conditioning environment until it is subjected to the flame.

6. CONFORMITY INSPECTIONS

Company conformity of the test articles will be conducted by Paravion Technology and documented on FAA Form 8130-9, Statement of Conformity. The test set-up will be verified by the witnessing Flammability DER to be in accordance with this test plan. The witnessing DER will coordinate with Paravion Technology, Inc, if design data changes are necessary, prior to DER approval.

7. VERTICAL TEST SET UP CONFIGURATION

The vertical test will be configured and conformed as follows, in accordance with 14 CFR Part 25, Appendix F, Part I, Section (b)(4):

- A Bunsen burner with a nominal 3/8 inch I.D. tube will be used for the test.
- Prior to testing, ignite the burner and set the flame height to 1½ inches.
- Using a calibrated thermocouple pyrometer, verify that the minimum flame temperature in the center of the flame is 1550° F. Record the flame temperature on the Test Data Sheet in Appendix B, and extinguish the flame.
- Set the automatic timer on the Flame Control Module to 12.0 seconds.
- Verify that the conditioning chamber has maintained the test articles at 70° ± 5°F and 50% ± 5% relative humidity for a minimum of 24 hours.
- Remove one test article from the conditioning chamber.

- Position the specimen in the support frame of the vertical test stand so that the edge being tested is centered ¾-inch above the top of the burner and the flame is applied to the center of the specimen. See Fig 1.
- Close the test cabinet door.

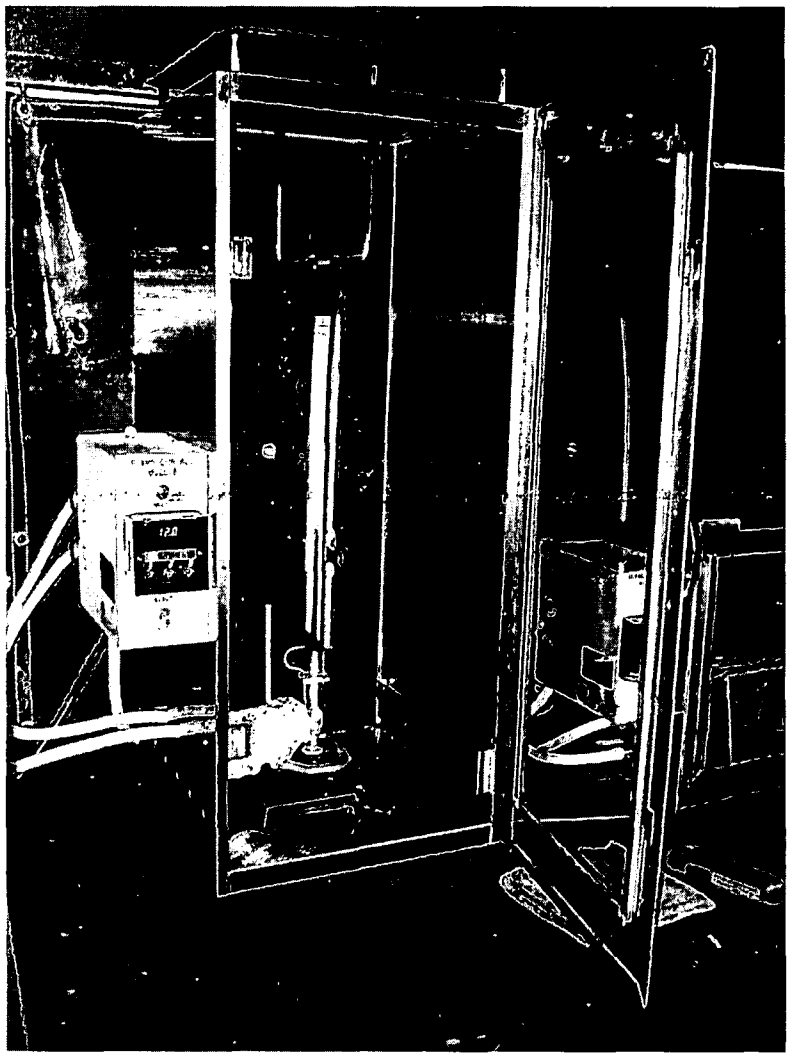

Fig 1. Test Specimen in Support Frame and Placement in Vertical Test Stand

8. TEST CONDUCT PROCEDURES

The vertical test will be conducted as follows, in accordance with 14 CFR Part 25, Appendix F, Part I, Section (b)(4). A minimum of three samples must be tested, and the results averaged.

- Verify the test article has been positioned in the chamber in accordance with Section 7.0.
- Activate the automatic flame timer switch.
- Verify that the burner ignites and the flame is applied to the center of the edge of the specimen.
- Verify that the automatic flame timer extinguishes the flame after 12 seconds.
- Observe the behavior of the specimen after the burner flame is extinguished. Continue timing as long as the specimen continues to flame. Note any drippings from the specimen and the flame time of the drippings.
- Record the flame time, burn length (to the nearest 0.1 inch) and flame time of drippings on the test data sheet.

9. PASS/FAIL CRITERIA

The material is considered to pass this test if all of the following criteria are met:

- The average flame time of the specimen after removal of the flame source may not exceed 15 seconds.
- The average burn length may not exceed 8 inches.
- Drippings from the test specimen may not continue to flame for more than an average of 5 seconds after falling.

10. TEST WITNESSING AND DATA APPROVAL

The selected Flammability DER will witness the tests and approve the test results. A copy of the approved test report and 8110-3 will be forwarded to Paravion Technology, Inc.

11. DESIGNATED PERSONNEL

The following is a list of designated personnel to be involved in this project:

Title	Name
DER Flammability	Bob Lazaroff DERT-660022-NM

12. REFERENCES

The following documents form a part of this document to the extent specified herein:

Document	Description
14 CFR Part 23	Airworthiness Standards, Normal Category Aircraft
14 CFR Part 25	Airworthiness Standards, Transport Category Aircraft
14 CFR Part 25, Appendix F, Part I	Test Criteria and Procedures for Showing Compliance with Flammability Requirements
DOT/FAA/AR-00/12	Aircraft Materials Fire Test Handbook
FAA Order 8110-113	Approval of Flammability Test Data in Support of Major Repairs or Major Alterations
Type Certificate Data Sheet 3A13	Type Certificate for Cessna Model 206

13. APPENDIX A: TEST RESULTS REPORT FROM MR. LAZAROFF

TEST SUMMARY

Testing was conducted on April 8, 2013 at the Centennial Aircraft Interiors Annex, 12559 E Broncos Pkwy, Centennial, CO 80112 by DER Bob Lazaroff, who was also delegated by the Denver ACO to witness the tests on their behalf. The test set-up was verified by the witnessing DER.

Three test articles were placed into the conditioning chamber, at 70˚F and 50% humidity, at 1030 on April 6, 2013. The test articles remained in the conditioning chamber until they were removed one at a time for testing.

The test articles were tested vertically in accordance with Sections 7 and 8 of this test plan. All three test articles self-extinguished after flame removal, with an average burn length of 1.50 inches, and with no flaming drips, thus successfully meeting the requirements of 14 CFR 23.853(a) as stated in Section 2 of this test plan.

FLAMMABILITY TEST REPORT
DATA SHEET

Test Article ID/PN	Material	Representative of: (list part number and description)	Regulatory Requirement and Amendment Level	Test Criteria per Part 25 Appendix F, Part I (mark "X" in appropriate block)			
				(a)(1)(i) 60 second Vertical	(a)(1)(ii) 12 second Vertical	(a)(1)(iv) 15 second Horizontal 2.5 in/min	(a)(1)(v) 15 second Horizontal 4.0 in/min
1, 2, 3	1x1 Plain Weave Carbon 2x2 Twill 3K Carbon LAM-135-FR Resin LAM-229 Hardener	Console	23.853(a) Amdt 23-62 *		X		

Test Sample	Test Results per Part 25 Appendix F, Part I (enter results in appropriate block)							
	(a)(1)(i) 60 second Vertical			(a)(1)(ii) 12 second Vertical			(a)(1)(iv) 15 second Horizontal	(a)(1)(v) 15 second Horizontal
	Burn Length (< 6 in)	After-Flame (< 15 sec)	Drip Flame (< 3 sec)	Burn Length (< 8 in)	After-Flame (< 15 sec)	Drip Flame (< 5 sec)	Burn Rate (< 2.5 in/min)	Burn Rate (< 4.0 in/min)
1				1.75 in	10.8 sec	No drips		
2				1.75 in	11.1 sec	No drips		
3				1.0 in	2.9 sec	No drips		
Average				1.50 in	8.3 sec	No drips		

* Tested to Part 25 requirements

Results: PASS ☒ FAIL ☐

DER: Robert C Logan DER-660022-NM

14. APPENDIX B: FAA FORM 8110-3

U.S. DEPARTMENT OF TRANSPORTATION
FEDERAL AVIATION ADMINISTRATION

STATEMENT OF COMPLIANCE WITH AIRWORTHINESS STANDARDS

1. DATE: 04/10/2013

AIRCRAFT OR AIRCRAFT COMPONENT IDENTIFICATION

2. MAKE	3. MODEL NO.	4. TYPE *(Aircraft, Engine, Propeller, etc.)*	5. NAME OF APPLICANT
Cessna	T206	Aircraft	Paravion Technology, Inc.

LIST OF DATA

6. IDENTIFICATION	7. TITLE
Report No. C206-CF Console Revision 1, 04/08/2013	Flammability Report, Test and Test Results

Notes:

1. All engineering aspects of the above listed data are approved herein. This approval is for engineering data only. It indicates the data listed above demonstrates compliance only with the regulation specified by paragraphs and subparagraph listed below as "Applicable Requirements".

2. This approval is for flammability aspects of the proposed installation only. Additional approvals may be required for the substantiation of compliance to necessary requirements for the entire type design change.

3. Delegation to approve test plan and witness tests by Satish Lall, Denver ACO, per Special Authorization, 4/1/13.

4. This approval is valid for the installation of the Hand Control Connector Housing on Cessna Model T206 S/N T20608983 only.

8. PURPOSE OF DATA: In support of a major alteration to Cessna Model 206 S/N T20608983

9. APPLICABLE REQUIREMENTS (List specific sections)

14 CFR 23.853(a), Amendment 23-62

10. CERTIFICATION - Under authority vested by direction of the Administrator and in accordance with conditions and limitations of appointment under 14 CFR Part 183, data listed above and on attached sheets numbered N/A have been examined in accordance with established procedures and found to comply with applicable requirements of the Airworthiness Standards listed.

I (We) Therefore
- ☐ **Recommend approval of these data**
- ☒ **Approve these data**

11. SIGNATURE(S) OF DESIGNATED ENGINEERING REPRESENTATIVE(S)	12. DESIGNATION NUMBERS(S)	13. CLASSIFICATION(S)
Robert C. Lazaroff *Robert C. Lazaroff*	DERT-660022-NM	Structures

The Composites Store, Inc.

COPY

PRODUCT CONFORMANCE CERTIFICATION

Customer No.: **R17364** **Ship Date:** 03/11/2013

Sold To: **PARAVION TECHNOLOGY, INC.** **Ship To:** SAME

Purchase Order No. 43778 **Invoice No.:** 130964

Item No.	Description	Quantity
CF141	3.5 oz. Carbon Fabric, 42" wide, Plain Weave	9 ft.

FDI Style Number: 824
Lot Number: 22032 Yarn Type: T300 1K 309 NT
Roll Number: 6A Date of Mfg: 08/2012
Weave: PW, Count: 24.1 x23.2 inches; Width: 42 ¾ "; Weight: 126.0 g/m²
Thickness: 0.008 inches

We hereby certify that the material listed conforms to applicable commercial specifications, or government specifications as shown below.

SPECIFICATION: Commercial Grade

Gail Gewain, President

Website: www.cstsales.com
P.O. Box 622, Tehachapi, California 93581-0622 • Phone: 661-822-4162 • Fax 661-822-4121

U.S. COMPOSITES, INC.
561/588-1001
6670 WHITE DRIVE
WEST PALM BEACH FL 33407

* * * Invoice 256020 * * *

Bill To :
Paravion Technology, Inc.
Valerie McAlpine
2001 Airway Ave.
FORT COLLINS 80524

Ship To :

Customer No. 270051

DATE	ORDER NO.	SLS.NO.	ORDER DATE	PURCHASE ORDER	SPECIAL INSTRUCTIONS
03/28/13			03/28/13		

Quantity	U/M	Description Stock Number	Code	Price	Extension
1.00	ea	CERT FEE FOR PREVIOUS SHIPMENT INVOICE # 255095 LOT # 1233808 ROLL # 0003802464	0004	$10.00	$10.00

Payment/Terms :
prepaid credit card

SUBTOTAL : $10.00

TAX :

FREIGHT :

INVOICE TOTAL DUE ====> $10.00

From the Quality Control Laboratories of:

BGF INDUSTRIES

Certificate of Compliance

U S COMPOSITES INC
6670 WHITE DRIVE
WEST PALM BEACH FL 33407

Date: 01/29/13 9:35:25
Page: 1

Style: 94933
Width: 50.0
Code/Part#
Contract: KB00219873 10

Attention:

Cust P.O.: 403389
Weave: 2X2 TWILL

Lot Number: 01233808/00010

Yarn Type Warp: TR30S 3K

Fill: TR30S 3K

Warp Lot: 1233303A
Fill Lot: 1223305A 1233303A 1253304A

Specifications:	Min -			50.0	12.0	12.0	205.0			
	Max -			50.5	14.0	14.0	215.0			
Lot#	Cut	Roll #	Net Wgt LBS	Yards	Meas. Width Inch	Warp Yarn /Inch	Fill Yarn /Inch	Dry Weight G/M2	Ext. Weight G/M2	Thick-ness Inch	Date of MFG.
1233808	009	0003802303	55	100	50.1	13.1	13.5	211.0	208.6	.0090	012513
1233808	011	0003802308	52	100	50.1	13.1	13.5	210.4	208.0	.0095	012513
1233808	013	0003802463	52	100	50.1	13.1	13.5	208.6	206.2	.0093	012513
1233808	012	0003802464	52	100	50.1	13.1	13.5	210.4	208.0	.0095	012513
1233808	017	0003803687	53	100	50.1	13.1	13.5	211.4	209.0	.0097	012813
1233808	016	0003803688	50	100	50.1	13.1	13.5	211.2	208.8	.0092	012813
		Total:	314	600							

We Certify that this material meets the requisites of

BGF DATA SHEET

Prepared and Verified by

Robert Gatti
Authorized Quality Representative

90 Huger Street Cheraw, SC 29520 (843) 537-3172 Fax (843) 537-7062

From the Quality Control Laboratories of:

BGF INDUSTRIES

Certificate of Compliance

U S COMPOSITES INC
6670 WHITE DRIVE
WEST PALM BEACH FL 33407

Attention:

Cust P.O.: 403389
Weave: 2X2 TWILL

Date: 01/29/13 9:35:25
Page: 2

Style: 94933
Width: 50.0
Code/Part#
Contract: KB00219873 10

Lot Number: 01233808/00010

Yarn Type Warp: TR30S 3K

Fill: TR30S 3K

Shipment Defect Summary

Lot #	Cut	Roll #	Yards	Distortion	Yard Length	Defect
1233808	009	0003802303	100	.1	6	DISTORTION
1233808	011	0003802308	100	.0		No Defects Recorded
1233808	013	0003802463	100	.1		No Defects Recorded
1233808	012	0003802464	100	.0		No Defects Recorded
1233808	017	0003803687	100	.2		No Defects Recorded
1233808	016	0003803688	100	.0		No Defects Recorded

90 Huger Street Cheraw, SC 29520 (843) 537-3172 Fax (843) 537-7062

Certificate of Conformity

GRAFIL INC.

5900 88th Street
Sacramento, CA 95828 USA

Phone No. 916/386-1733 or 800/365-5533
Fax No. 916/379-2183

Order No. 29952

Customer No. BGF01

Certificate of Conformity: 23193
GI Reference: 29952
Certificate Date: 10/25/2012
Fiber Type: TR30S 3K 1.2%S PYROFIL

Size: 1.2%S
Quantity in lbs: 3,531.52

Deliver To: BGF Industries Inc.
Cheraw Speciality Weaving
90 Huger Street
90 Huger Street
Cheraw, SC 29520

Customer Purchase Order		Item #	Specification			Salesperson	Customer Part #	
03005814-100		TR-30S-3LSL	CF-202 Ver.1			Wayne Schaefer		
Batch No.	Date of Manufacture	Quantity (lbs)	Strength (ksi)	Modulus (msi)	Yield (yd/lb)	Fiber Density (lb/in3)	Size Content (% by Mass)	Elongation (%)
1223305A	02/2012	3,531.52	604.8	33.5	2469.0	0.06429	1.2	1.80

Shelf Life for Pyrofil: 3 years from Date of Manufacture

Certified that the supplies/services detailed herein have been inspected and tested in accordance with the conditions and requirements of the contract or conform in all respects to the specification(s), drawings relevant thereto.

Signed: R Hagen

For and on behalf of Grafil Inc.

Certificate of Conformity

GRAFIL INC.
5900 88th Street
Sacramento, CA 95828 USA

Phone No. 916/386-1733 or 800/365-5533
Fax No. 916/379-2183

Order No. 30586
Customer No. BGF01

Certificate of Conformity: 23444
GI Reference: 30586
Certificate Date: 01/16/2013
Fiber Type: TR30S 3K 1.2%S PYROFIL
Size: 1.2%S
Quantity in lbs: 3,491.84

Deliver To: BGF Industries Inc.
Cheraw Speciality Weaving
90 Huger Street
90 Huger Street
Cheraw, SC 29520
USA

Customer Purchase Order		Item #	Specification			Salesperson	Customer Part #	
03006103-20		TR-30S-3LSL	CF-202 Ver.1			Wayne Schaefer		
Batch No.	Date of Manufacture	Quantity (lbs)	Strength (ksi)	Modulus (msi)	Yield (yd/lb)	Fiber Density (lb/in3)	Size Content (% by Mass)	Elongation (%)
1233303A	03/2012	357.12	604.0	33.8	2469.0	0.06429	1.2	1.80
1263304A	05/2012	3,134.72	603.0	33.4	2469.0	0.06419	1.2	1.80
	Cert total:	3,491.84						

Shelf Life for Pyrofil: 3 years from Date of Manufacture

Certified that the supplies/services detailed herein have been inspected and tested in accordance with the conditions and requirements of the contract or conform in all respects to the specification(s), drawings relevant thereto.

Signed: _____
For and on behalf of Grafil Inc.

Monday, March 11, 2013

PRO-SET

To Whom it May Concern:

This is to certify that the PRO-SET® product(s) that you recently purchased were manufactured in accordance with our standard quality control procedures. In addition, a representative sample from each batch was tested for conformity to our internal specifications and a portion of that sample will be retained for 18 months from the production date.

RESULTS OF ANALYSIS

Product:	**Batch Number:**	**Date Produced**	**Tested With:**
LAM-135-FR	1363018A	01-18-2013	LAM-224

DSC 822e	**Limits**
TPeak1=85.69(°C)	85.38-86.73(°C)
TPeak2=0(°C)	-(°C)
dH=489.44(J/g)	434.82-505.34(J/g)
tg=90.43(°C)	89.77-93.4(°C)

Viscosity	**Limits**
3972cPs	3662-4027cPs

STATEMENT OF SHELF LIFE

Minimum 3 years from date of manufacture when stored in original sealed container.

Sincerely,

PRO-SET, INC.

Julie VanMullekom

NOTES:
VOLTAGE RANGE: 11 - 30 VOLTS
POWER CONSUMPTION: 72 VA
TROLL INTERFACE: CONNECTOR P2 PINS H, J & K
FOR REFERENCE USE ONLY

REVISION HISTORY			
REV	DESCRIPTION	DATE	APPROVED
A	INITIAL RELEASE	3/16/2011	O REYES

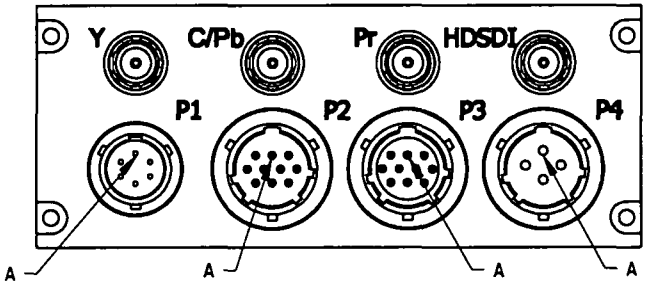

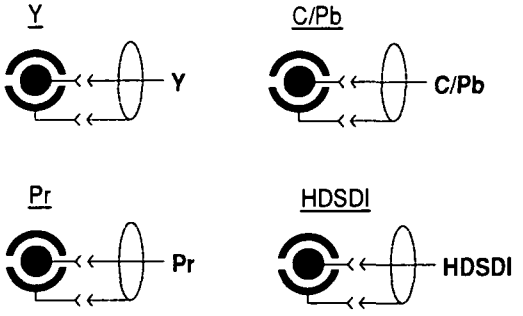

HAND HELD CONTROLLER

PT02E-10-6S (TX Chassis) — PT06E10-6P(SR) (Free Plug)

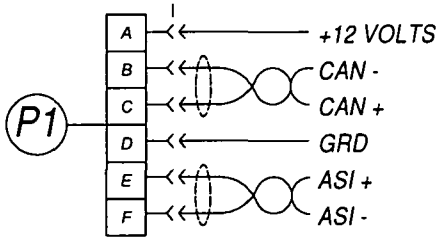

DATA INTERFACE

PT02E-12-10S (TX Chassis) — PT06E12-10P(SR) (Free Plug)

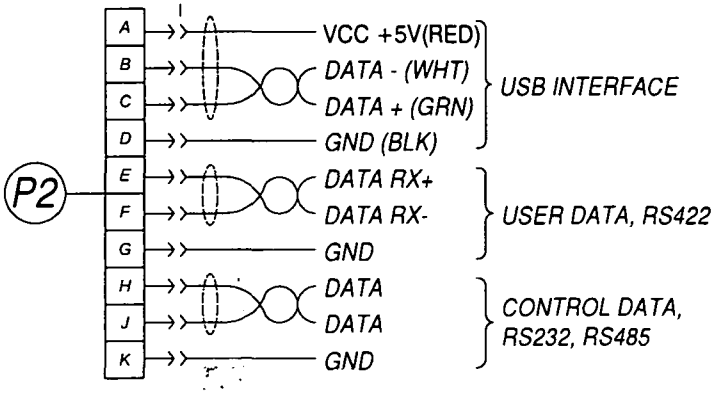

AUDIO INTERFACE

PT02E-12-10S (TX Chassis) — PT06E12-10P(SR) (Free Plug)

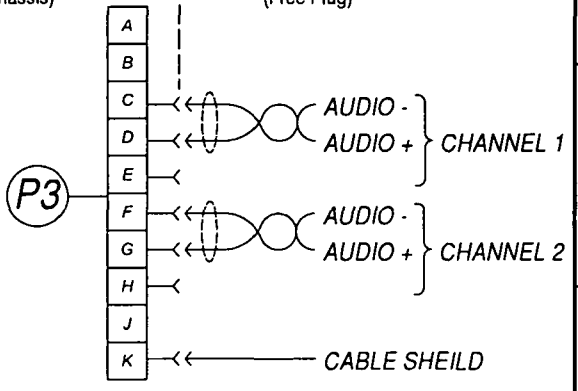

POWER INTERCONNECT

PT02E-12-4P (TX Chassis) — PT06E12-4S(SR) (Free Plug)

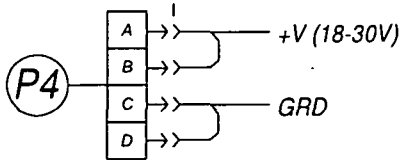

TOLERANCE INFO:
ALL DIMENSIONS ARE IN INCHES.
DECIMAL .XX ±.01, .XXX±.0025, ANGULAR ± .3°
HOLE SIZE +.003, -.002, CONCENTRICITY ±.001,
FLATNESS ±.0025, SURFACE FINISH 63 OR BETTER

PART NO:	1011139
REV:	A
DESIGNER:	J PORTER
ENGINEER:	O REYES
SHEET:	1 OF 1
DATE:	3/16/2011

AVIATION Tx WIRING INTERFACE

JANTEQ CORPORATION
9272 JERONIMO RD.
IRVINE, CA. 92618
PH: (949) 215-2603
FAX: (949) 215-2604

COMPUTER GENERATED
DO NOT REVISE MANUALLY
DO NOT SCALE DRAWING

24C24 535721-01

REVISIONS

ZONE	REV.	DESCRIPTION	DATE	APP'D

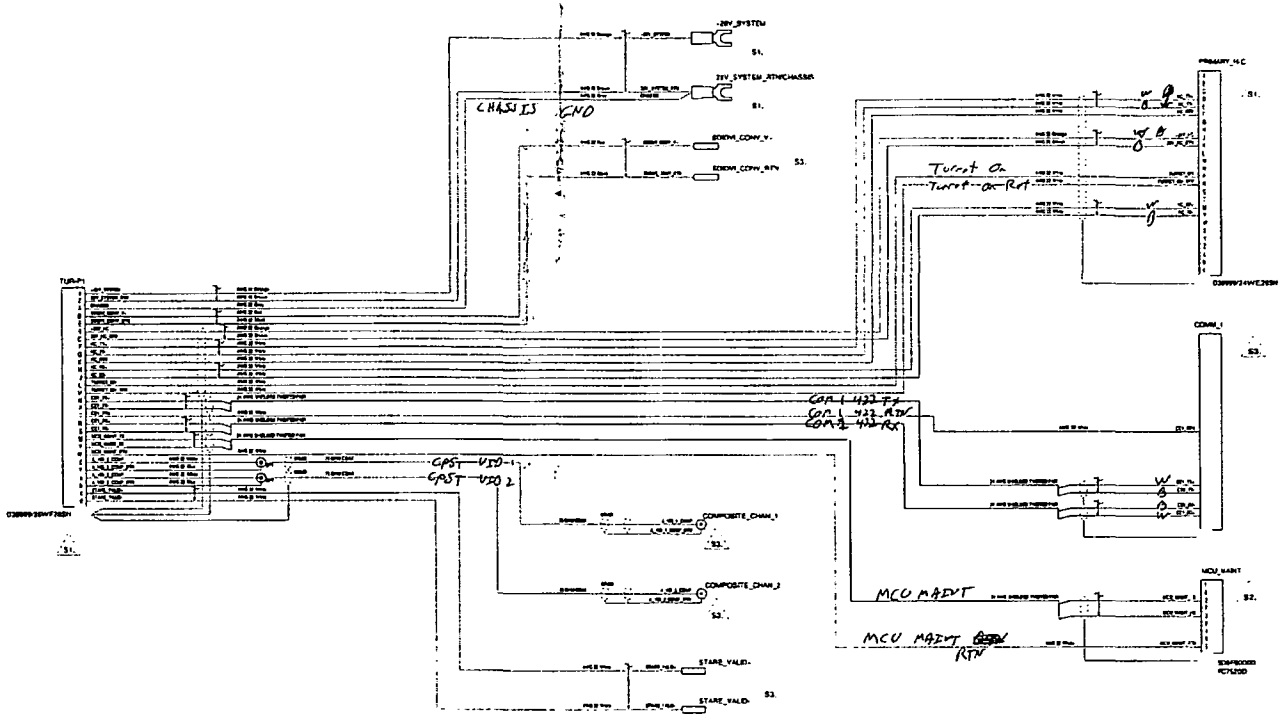

NOTES:

S1. SPECIFIED CONNECTOR IS REQUIRED.

S2. RECOMMENDED; CONNECTOR WOULD BE USEFUL FOR WESCAM TROUBLE SHOOTING, HOWEVER IT IS NOT REQUIRED.

S3. OPTIONAL; REQUIREMENT DEPENDANT ON INDIVIDUAL SYSTEM CONFIGURATION AND OPTIONS. SPECIFIED CONNECTOR IS REQUIRED IF CONFIGURATION IS DESIRED.

ENSURE GOOD ELECTRICAL CONDUCTIVITY BETWEEN SHIELDS AND BACKSHELL.

MINIMUM WIRE GUAGE IS IDENTIFIED.

REFERENCE DOCUMENT: 64370 ICD FOR MX-10 DIGITAL TURRET.

REFERENCE ONLY, ICD TAKES PRECEDENCE.

PART NUMBER

11/06/01
P.QUEVEDO
D.PRINCE
S.WONG
ECO012670
535721-.E35

WESCAM
BURLINGTON, ONTARIO, CANADA

NTS

SHEET 1 OF 1

REVISIONS

ZONE	REV.	DESCRIPTION	DATE	APP'D

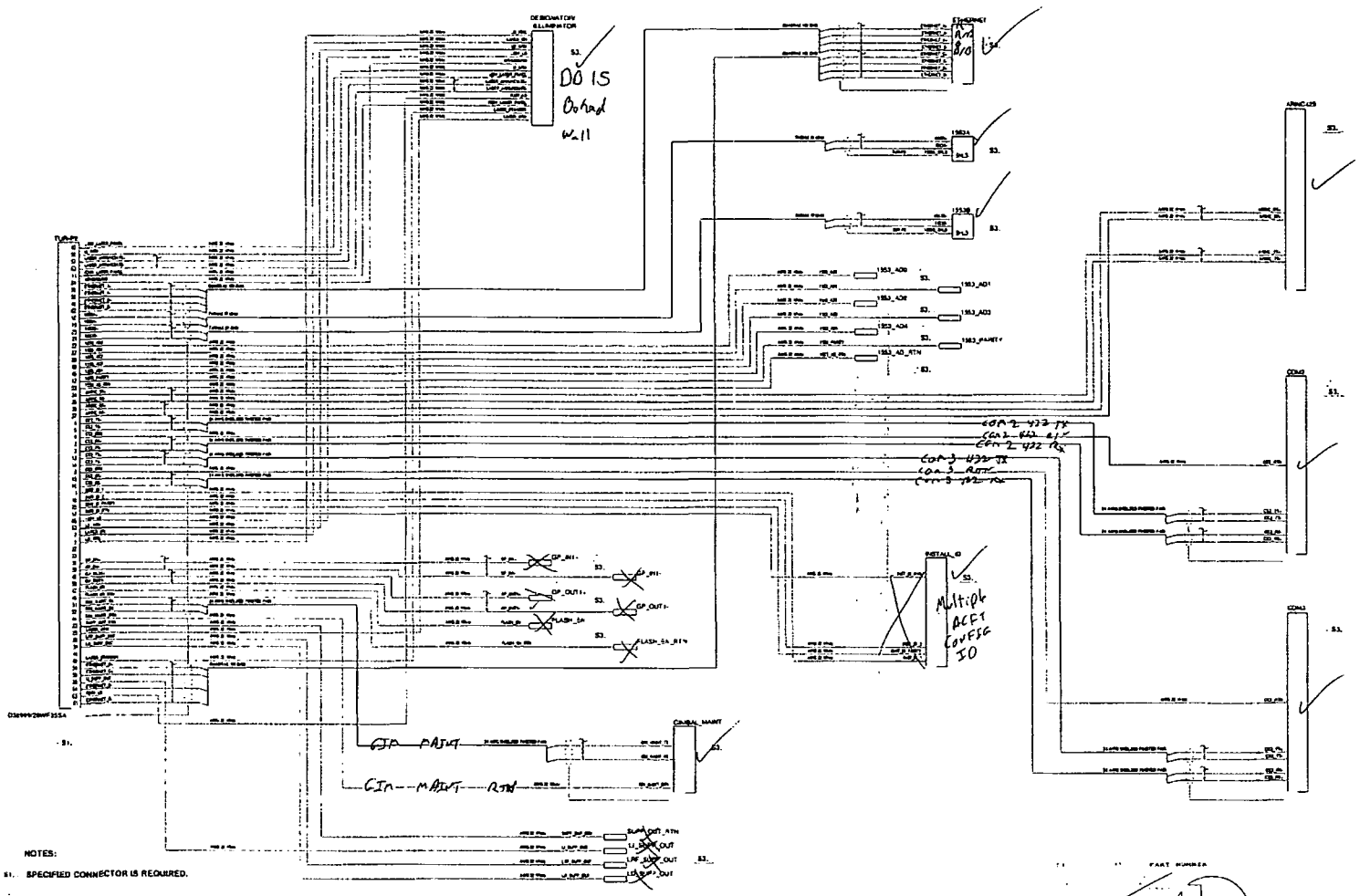

NOTES:

S1. SPECIFIED CONNECTOR IS REQUIRED.

S2. RECOMMENDED; CONNECTOR WOULD BE USEFUL FOR WESCAM TROUBLE SHOOTING, HOWEVER IT IS NOT REQUIRED.

S3. OPTIONAL; REQUIREMENT DEPENDANT ON INDIVIDUAL SYSTEM CONFIGURATION AND OPTIONS. SPECIFIED CONNECTOR IS REQUIRED IF CONFIGURATION IS DESIRED.

ENSURE GOOD ELECTRICAL CONDUCTIVITY BETWEEN SHIELDS AND BACKSHELL.

MINIMUM WIRE GUAGE IS IDENTIFIED.

REFERENCE DOCUMENT: 64270 ICD FOR MX-10 DIGITAL TURRET.

REFERENCE ONLY, ICD TAKES PRECEDENCE.

PART NUMBER

WESCAM

BURLINGTON, ONTARIO, CANADA

11/06/01
P.QUEVEDO
D.PRINCE
S.AONG
ECO012670
55573-.E35 HTS

SHEET 1 OF 1

3AC24 53574-01 1 -

COMPUTER GENERATED
DO NOT REVISE MANUALLY
DO NOT SCALE DRAWING

ZONE	REV.	REVISIONS DESCRIPTION	DATE	APP'D

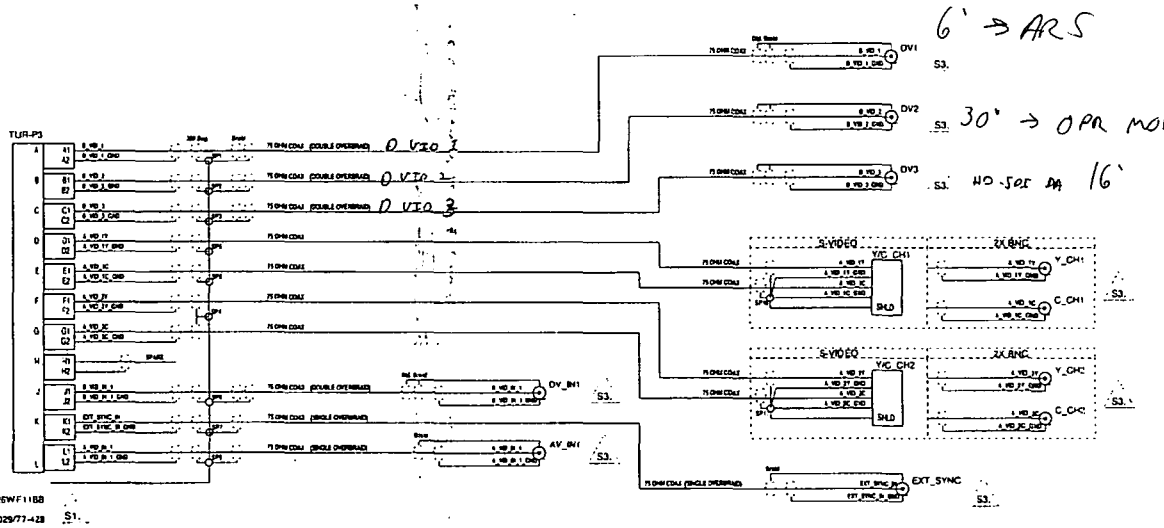

NOTES:

S1. SPECIFIED CONNECTOR IS REQUIRED.

S2. RECOMMENDED; CONNECTOR WOULD BE USEFUL FOR WESCAM TROUBLE SHOOTING, HOWEVER IT IS NOT REQUIRED.

S3. OPTIONAL; REQUIREMENT DEPENDANT ON INDIVIDUAL SYSTEM CONFIGURATION AND OPTIONS. SPECIFIED CONNECTOR IS REQUIRED IF CONFIGURATION IS DESIRED.

ENSURE GOOD ELECTRICAL CONDUCTIVITY BETWEEN SHIELDS AND BACKSHELL.

MINIMUM WIRE GUAGE IS IDENTIFIED.

REFERENCE DOCUMENT: 64270 ICD FOR MX-10 DIGITAL TURRET.

REFERENCE ONLY, ICD TAKES PRECEDENCE.

WESCAM

BURLINGTON, ONTARIO, CANADA

11/06/01
P.QUEVEDO
D.PRINCE
S.WONG
EC0012670
535741-.E3S NTS

SHEET 1 OF 1

COMPUTER GENERATED
DO NOT REVISE MANUALLY
DO NOT SCALE DRAWING

REVISIONS

ZONE	REV.	DESCRIPTION	DATE	APP'D

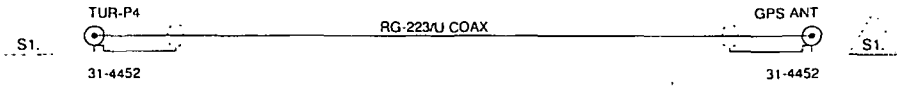

NOTES:

S1. SPECIFIED CONNECTOR IS REQUIRED.

S2. RECOMMENDED; CONNECTOR WOULD BE USEFUL FOR WESCAM TROUBLE SHOOTING, HOWEVER IT IS NOT REQUIRED.

S3. OPTIONAL; REQUIREMENT DEPENDANT ON INDIVIDUAL SYSTEM CONFIGURATION AND OPTIONS. SPECIFIED CONNECTOR IS REQUIRED IF CONFIGURATION IS DESIRED.

ENSURE GOOD ELECTRICAL CONDUCTIVITY BETWEEN SHIELDS AND BACKSHELL.

MINIMUM WIRE GUAGE IS IDENTIFIED.

REFERENCE DOCUMENT: 64270 ICD FOR MX-10 DIGITAL TURRET.

REFERENCE ONLY, ICD TAKES PRECEDENCE.

L3 communications WESCAM

10/02/24
D.PRINCE
D.PRINCE
S.WONG
ECO012670
535751-.E3S

GPS ANTENNA CABLE, RG, MX-10

53575-01

NTS

SHEET 1 OF 1

REVISION HISTORY				
[illegible]	[illegible]	[illegible]	[illegible]	[illegible]
[illegible]	[illegible]	[illegible]	[illegible]	[illegible]
[illegible]	[illegible]	[illegible]	[illegible]	[illegible]
[illegible]	[illegible]	[illegible]	[illegible]	[illegible]
[illegible]	[illegible]	[illegible]	[illegible]	[illegible]

NOTES:

1. ACTUAL VNE IS INSTALLATION DEPENDENT, MAXIMUM AIRSPEED: 300 KNOTS WITH POWER ON OR OFF AT SEA LEVEL, ISA STANDARD CONDITIONS.
2. MAXIMUM PRESSURE ALTITUDE FOR TURRET OPERATIONS: 25000 FT.
3. TURRET MASS: 16.8 kg MAX.
4. SYMMETRICAL 4 HOLE MOUNTING PATTERN, TURRET CAN BE ORIENTED IN 4 POSITIONS USING MOUNTING OPTION 1. FOR PROPER FUNCTIONING OF SYSTEM, INCLUDING LASER CUTOUTS, ORIENT TURRET TO AIRCRAFT FORWARD DIRECTION USING TURRET FORWARD MARKING.
5. SYMMETRICAL 3 HOLE MOUNTING PATTERN, TURRET CAN BE ORIENTED IN 3 POSITIONS USING MOUNTING OPTION 2. FOR PROPER FUNCTIONING OF SYSTEM, INCLUDING LASER CUTOUTS, ORIENT TURRET TO AIRCRAFT FORWARD DIRECTION USING TURRET FORWARD MARKING.
6. MOUNTING TABS FOR TURRET MOUNTING OPTION 2 ARE AVAILABLE AS A SEPARATE KIT, EACH TAB IS RETAINED BY TWO M4x0.7 x 10mm CAP SC SCREWS, DIN 912 STRENGTH GRADE 12.9 OR EQUIVALENT. INSTALLATION TORQUE FOR THE M4 CAPSCREWS IS 1.8 ±0.3 NM.
7. FOR MOUNTING OPTION 1, INSTALL TURRET WITH M4 ±0.35 FASTENERS OR STRENGTH EQUIVALENT. ENSURE LENGTH EXTENDS 0.3 INCHES +0.1/-0 INCHES BELOW MATING SURFACE.
8. FOR MOUNTING OPTION 2, INSTALL TURRET WITH M4 ±0.35 FASTENERS OR STRENGTH EQUIVALENT. ENSURE THREAD ENGAGEMENT IS 0.3 INCHES +0.1/-0 INCHES INTO A THREAD INSERT OR PARENT MATERIAL THAT WILL NOT FAIL BEFORE BOLT SPLEAKAGE.
9. TIGHTEN ALL TURRET INSTALLATION FASTENERS TO 100 ± 10 INLBS FOR BOTH MOUNTING OPTIONS 1 AND 2.
10. CAUTION: AFTER INSTALLATION, KEEP FINGERS, CLOTHING AND OTHER ITEMS CLEAR OF TURRET, MACHINERY IS AUTOMATIC AND MAY MOVE SUDDENLY.
11. STOW DURING HANDLING.
12. PITCH AXIS (ELEVATION) STOW POSITION IS AT 90°.
13. YAW AXIS (AZIMUTH) STOW POSITION IS AT ±90°.
14. DO NOT IMMERSE IN WATER. DO NOT POWER WASH.
15. KEEP WINDOWS CLEAN.
16. SEE SHEET 3 FOR LASER SAFETY WARNING LABELS ON TURRET.
17. PRIOR TO INSTALLATION, CLEAN OUT THE MOUNTING HOLES AND AREAS AROUND THE HOLES USING A DRY CLOTH.
18. ANY BRACKET STRUCTURE BETWEEN THE AIRCRAFT AND THE TURRET SHOULD HAVE A STRUCTURAL NATURAL FREQUENCY GREATER OR EQUAL TO 20HZ.
19. TURRET COLOUR OPTIONS APPLY TO EXTERIOR SURFACES OF ENCLOSURE THAT ROTATE IN AZIMUTH. THE UPPER SECTION OF THE TURRET FIXED TO THE AIRCRAFT WILL BE BLACK IN APPEARANCE FOR ALL TURRETS COLOUR OPTIONS.
20. SEE SHEET 4. IF LABEL IS PRESENT, MX-10 PRODUCT CONFORMS TO CFR 1040 AND 1040.11 TITLE 21 AND APPROVED VARIANCES WHEN INTEGRATED IN ACCORDANCE WITH L3 WESCAM 53-12.
21. SEE SHEET 4. IF LABEL IS PRESENT, MX-10 LASER PRODUCT IS EXEMPT FROM CFR 1040.10 AND 1040.11 TITLE 21 TO THE EXTENT STATED IN THE APPLICABLE LASER EXEMPTION NOTIFICATION.
22. REFER TO LASER RADIATION HOOD LABEL (DOLB) TABLE ON SHEET 4.
23. REFER TO LASER RADIATION HOOD LABEL (DOLB) TABLE ON SHEET 4.
24. REFER TO FDA CERTIFICATION LABEL TABLE ON SHEET 4.

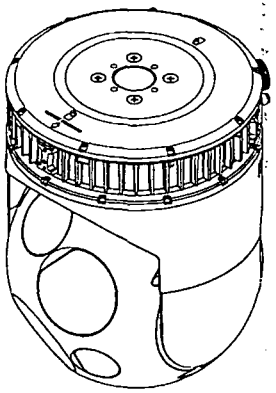

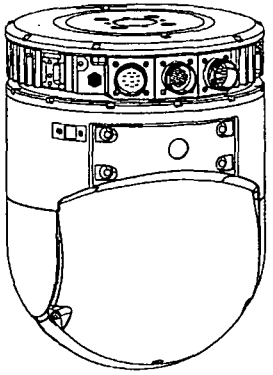

NOTICE

This document contains technical data relating to a commercial, off the shelf product that was developed at private expense in Canada and is proprietary data of L-3 WESCAM.

This data is submitted with limited rights. This data may not be reproduced or used without written permission of L-3 WESCAM.

L3 COMMUNICATIONS WESCAM	TURRET, MX-10, OUTLINE AND INSTALLATION		
D	3AC24	92022	D
		SHEET 1 OF 4	

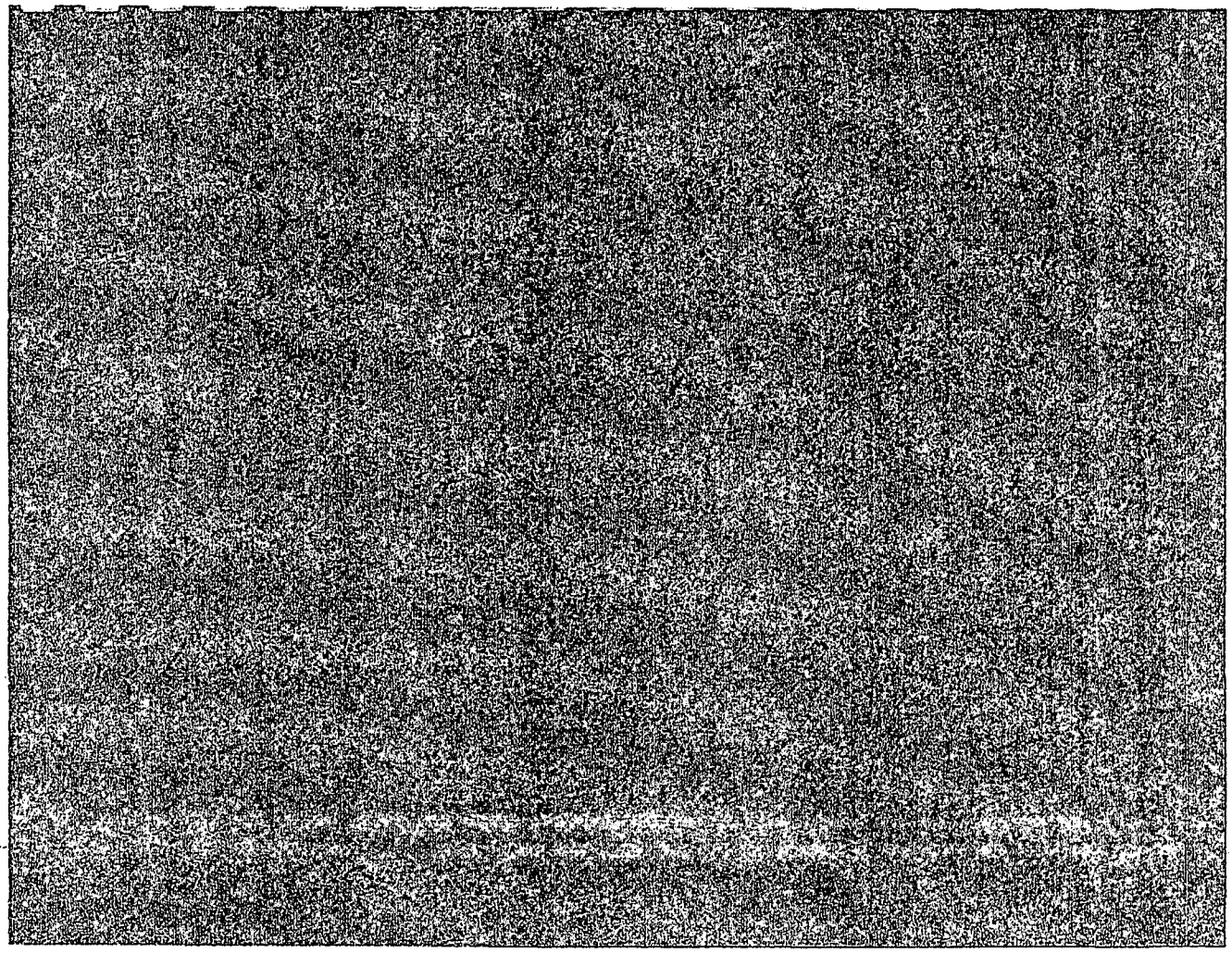

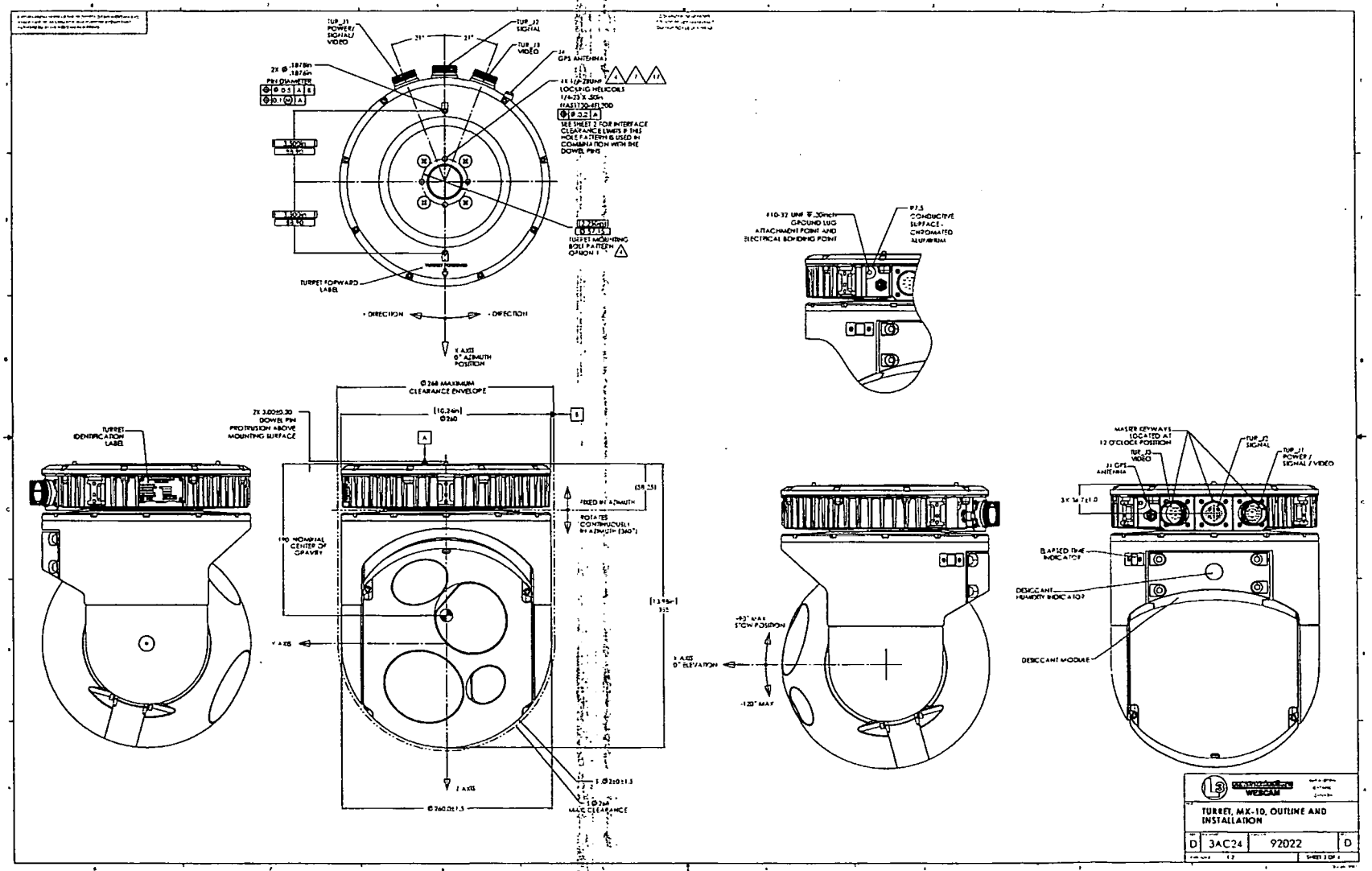
TUR_J1 POWER/ SIGNAL/ VIDEO
TUR_J2 SIGNAL
TUR_J3 VIDEO
GPS ANTENNA
LOCKING HELICOIL
SEE SHEET 2 FOR INTERFACE CLEARANCE LINES IF THIS HOLE PATTERN IS USED IN COMBINATION WITH THE DOWEL PINS
TURRET MOUNTING BOLT PATTERN OPTION 1
TURRET FORWARD LABEL
+ DIRECTION
- DIRECTION
Y AXIS 0° AZIMUTH POSITION
#10-32 UNF
GROUND LUG ATTACHMENT POINT AND ELECTRICAL BONDING POINT
CONDUCTIVE SURFACE - CHROMATED ALUMINUM
TURRET IDENTIFICATION LABEL
DOWEL PIN PROTRUSION ABOVE MOUNTING SURFACE
Ø268 MAXIMUM CLEARANCE ENVELOPE
FIXED IN AZIMUTH
ROTATES CONTINUOUSLY IN AZIMUTH (360°)
180 NOMINAL CENTER OF GRAVITY
X AXIS
Z AXIS
MAX CLEARANCE
-90° MAX STOW POSITION
X AXIS 0° ELEVATION
-120° MAX
MASTER KEYWAYS LOCATED AT 12 O'CLOCK POSITION
ELAPSED TIME INDICATOR
DESICCANT HUMIDITY INDICATOR
DESICCANT MODULE
WESCAM
TURRET, MX-10, OUTLINE AND INSTALLATION
D
3AC24
92022
D

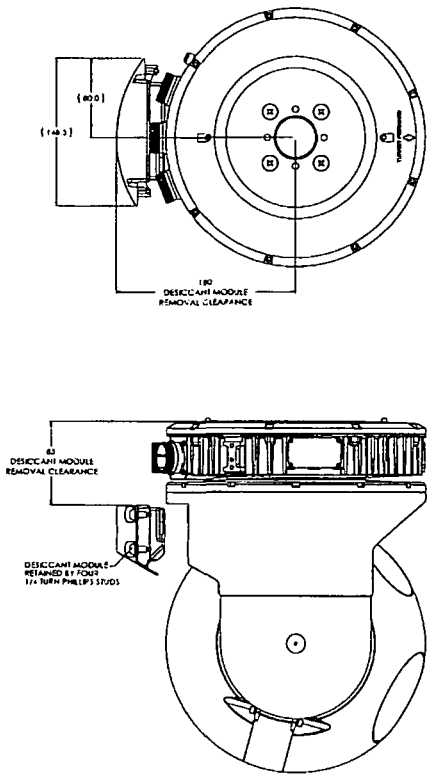

DESICCANT MODULE CLEARANCE

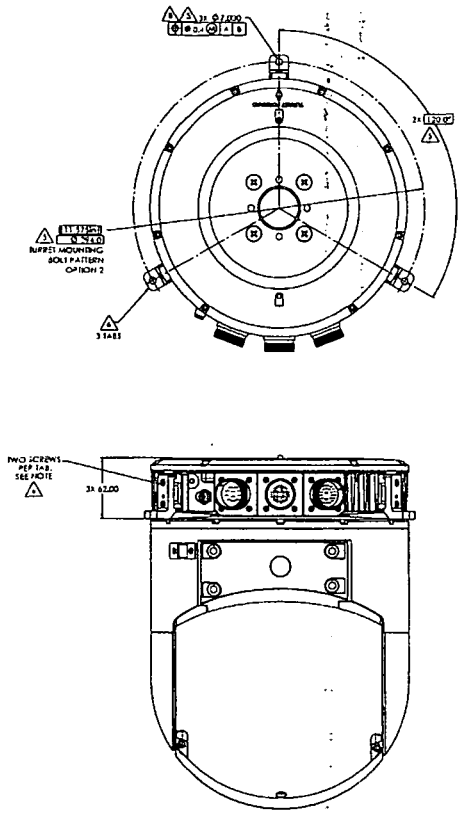

OPTION 2 MOUNTING PROVISION

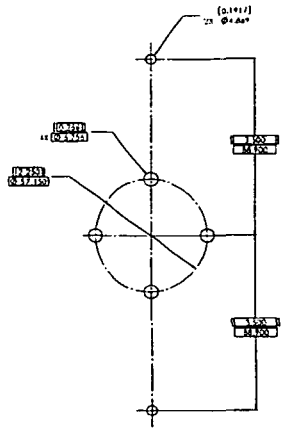

MINIMUM CLEARANCE REQUIRED
FOR INTERFACE TO TURRET USING
BOTH DOWEL PINS AND 1/4"-28 MOUNTING HOLES

DIMENSIONS IN [ ] BRACKETS ARE IN INCHES

	TURRET, MX-10, OUTLINE AND INSTALLATION		
D	3AC24	92022	D
	1:2	SHEET 3 OF 4	

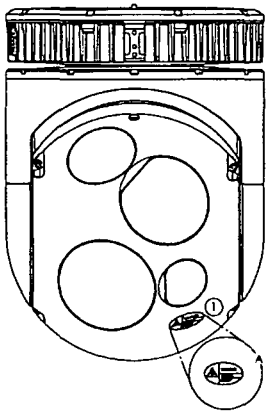

DETAIL A
SCALE 2 : 1

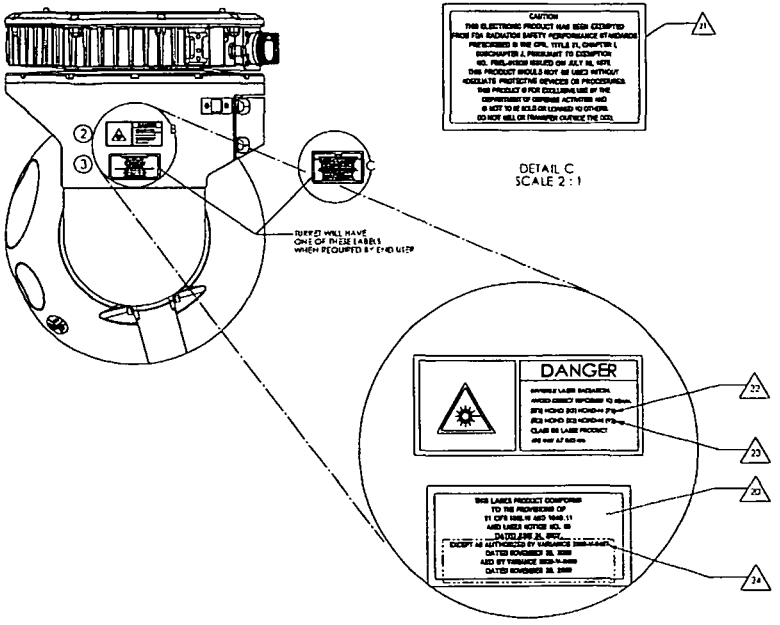

DETAIL C
SCALE 2 : 1

DETAIL B
SCALE 2 : 1

LASER RADIATION WARNING LABELS

LASER LABEL REQUIREMENTS & LOCATIONS		
	DUAL DIVERGENCE LASER ILLUMINATOR (DDLI)	EYESAFE LASER RANGE FINDER (ELRF)
SYSTEM LABELS	1 LASER RADIATION APERTURE 2 LASER RADIATION NOMO	NONE
END USER SPECIFIC LABELS	3 FDA CERTIFICATION OR FDA EXEMPTION	4 FDA CERTIFICATION OR FDA EXEMPTION

LASER RADIATION NOMO LABEL (DDLI)					
	21			22	
11	X1	Y1	12	X2	Y2
WIDE	40m	240m	NARROW	400m	2400m

FDA CERTIFICATION LABEL	
LASER TYPE	VARIANCE 23
DDLI	2010-V-0151 (EFFECTIVE 2011/01/20)
ELRF	NONE

FOR REFERENCE ONLY

TURRET, MX-10, OUTLINE AND INSTALLATION		
D 3AC24	92022	D

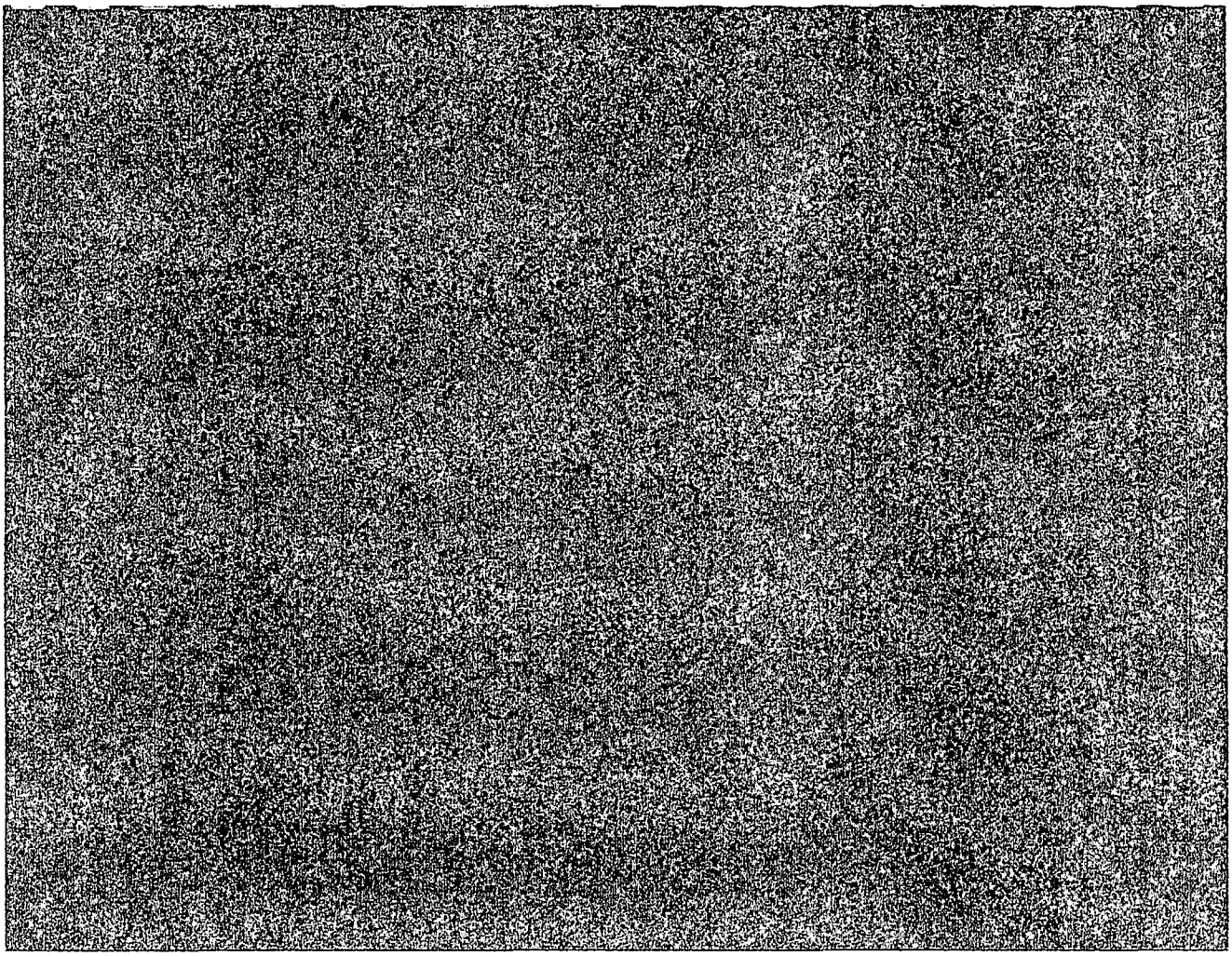

3AC24 53412 1 A04

COMPUTER GENERATED
DO NOT REVISE MANUALLY
DO NOT SCALE DRAWING

REVISIONS

ZONE	REV.	DESCRIPTION	DATE	APP'D
	A01	INITIAL RELEASE	27-FEB-09	EC07013
	A02	AS PER ALPHA EC07492	31-MAR-09	EC07492
	A03	AS PER ALPHA EC0011470	29 JAN 10	EC011470
	A04	AS PER ALPHA EC0011698	16 FEB 10	EC011698

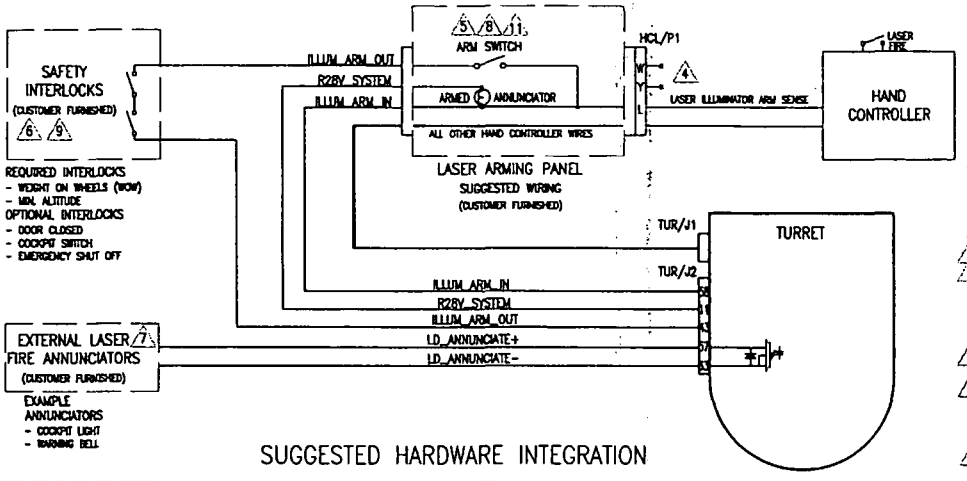

SUGGESTED HARDWARE INTEGRATION

LASER ARMING SEQUENCE

- SAFTEY INTERLOCK(S) MUST BE CLOSED FOR "ILLUM_ARM_OUT" TO PROVIDE POWER TO THE ARMING PANEL.
- LASER ARMING PANEL KEY(S) AND/OR SWITCH(S) SWITCH "ILLUM_ARM_IN" FROM OPEN TO +28VDC.
- WHEN "ILLUM_ARM_IN" IS +28VDC, POWER TO THE LASER IS ENABLED AND THE LASER IS ARMED.

LASER FIRING SEQUENCE

- THE LASER MUST BE ARMED.
- TO FIRE THE LASER, THE "LASER" BUTTON ON THE HANDCONTROLLER MUST BE HELD CLOSED FOR TWO SECONDS. AFTER THE TWO SECOND DELAY, THE LASER IS ISSUED THE FIRE COMMAND IN SOFTWARE.
- THERE IS A 50 MILLISECOND DELAY AFTER RECEIVING THE FIRE COMMAND BEFORE ACTUAL LASING.

LASER ARMED ANNUNCIATION

- WHILE THE LASER IS ARMED, AN "ARMED" ANNUNCIATOR ACROSS J2 PINS 11 AND 58 IS ILLUMINATED, THE "ARMED" LED ON THE HAND CONTROLLER IS ILLUMINATED, AND THE TEXT CUE "ARMED" IS DISPLAYED ON THE VIDEO OVERLAY.
- NOTE THAT WHEN "CUTOUT" IS DISPLAYED ON THE VIDEO OVERLAY THE LASER IS ARMED BUT CANNOT FIRE UNTIL THE LASER LINE OF SIGHT IS OUTSIDE OF THE CUTOUT ZONES DEFINED IN SOFTWARE.

LASER FIRING ANNUNCIATION

- WHILE THE LASER IS FIRING, SOFTWARE CLOSES A MOSFET ACROSS J2 PINS 57 AND 63 ACTIVATING CUSTOMER FURNISHED RELAYS TO DRIVE LASER FIRE WARNING DEVICES.
- WHILE THE LASER IS FIRING, SOFTWARE ILLUMINATES THE HANDCONTROLLER "FIRING" LED AND DISPLAYS "ACTIVE" ON THE OVERLAY.

NOTES

1. THIS IS A FUNCTIONAL DIAGRAM ONLY. DO NOT RELY ON FOR DETAIL ELECTRICAL DESIGN. INSTALLATION REQUIREMENTS MAY DIFFER FROM THE FEATURES PROVIDED BY THIS DRAWING.
2. +28VDC IS IN REFERENCE TO R28V_SYSTEM UNLESS OTHERWISE STATED
3. ENSURE DESIGN KEEPS "ILLUM_ARM_IN" OPEN (UNARMED STATE) OR AT +28VDC (ARMED STATE).
4. PINS W & Y OF THE HAND-CONTROLLER ARE NOT CONNECTED.
5. ALL DEVICES (INCLUDING ANNUNCIATORS) THAT ARE POWERED FROM ILLUM_ARM_IN OR ILLUM_ARM_OUT MUST BE SUNK TO R28V_SYSTEM; MAX CURRENT 250mA. ALL OTHER DEVICES MUST BE ISOLATED FROM ILLUM_ARM_OUT/ILLUM_ARM_IN/R28V_SYSTEM. ENSURE THAT ILLUM_ARM_OUT (+28VDC) AND ILLUM_ARM_IN ARE NEVER PERMITTED TO MAKE A DIRECT CONNECTION TO R28V_SYSTEM, OR CHASSIS.
6. MAX RESISTANCE BETWEEN PINS 43 AND 58 (ILLUM_ARM_IN/OUT) WHEN SAFETY INTERLOCKS ARE CLOSED IS < 0.5 Ohm.
7. INDEPENDENTLY POWERED LASER FIRE WARNING DEVICES MAY BE ACTIVATED VIA A SWITCH CLOSED BY SOFTWARE ACROSS J2 PINS 57 AND 63 (LD_ANNUNCIATE+/-). SWITCH IS 28V LOGIC, 250mA MAX AT HIGH STATE. ENSURE VOLTAGE OF PIN 57 WITH RESPECT TO 63 IS +28VDC WITHIN THE TOLERANCES SPECIFIED IN MIL-STD-704F.
8. IT IS RECOMMENDED THAT THE ARM SWITCH, AS REPRESENTED IN THIS SCHEMATIC, INCORPORATE A KEYED SWITCH. THE KEY SHOULD NOT BE REMOVABLE IN THE ENABLED (CLOSED) POSITION. ARM SWITCH MUST TRANSISTION FROM AN 'ARMED' TO AN 'UNARMED' STATE UPON ANY INTERRUPTION OF 'SAFE28' (SAFETY INTERLOCKS).
9. WOW AND MIN ALT INTERLOCKS MUST BE IMPLEMENTED. MIN ALT SHALL PROVIDE CLOSURE ONLY WHEN AIRCRAFT ALT AGL EXCEEDS THE LARGEST UNAIDED NOHD SPECIFIED IN OUTLINE & INSTALLATION DRAWING.
10. LASER ILLUMINATOR IS A NON-EYE SAFE AND INVISABLE CLASS IV LASER. FAILURE TO COMPLY WITH MANDATORY INTEGRATION REQUIREMENTS MAY COMPROMISE SAFETY AND RESULT IN HAZARDS. SEE SAFETY WARNINGS IN OPERATOR'S MANUAL.
11. IT IS RECOMMENDED THAT AN EMERGENCY STOP SWITCH BE INCORPORATED.

MX-10 WITH HANDCONTROLLER (HCL)

L3 communications WESCAM

2009/03/31

P. QUEVEDO

J. GOMBOC

EC07492

534121A041.DWG NTS SHEET 1 OF 1

WESCAM PART No.

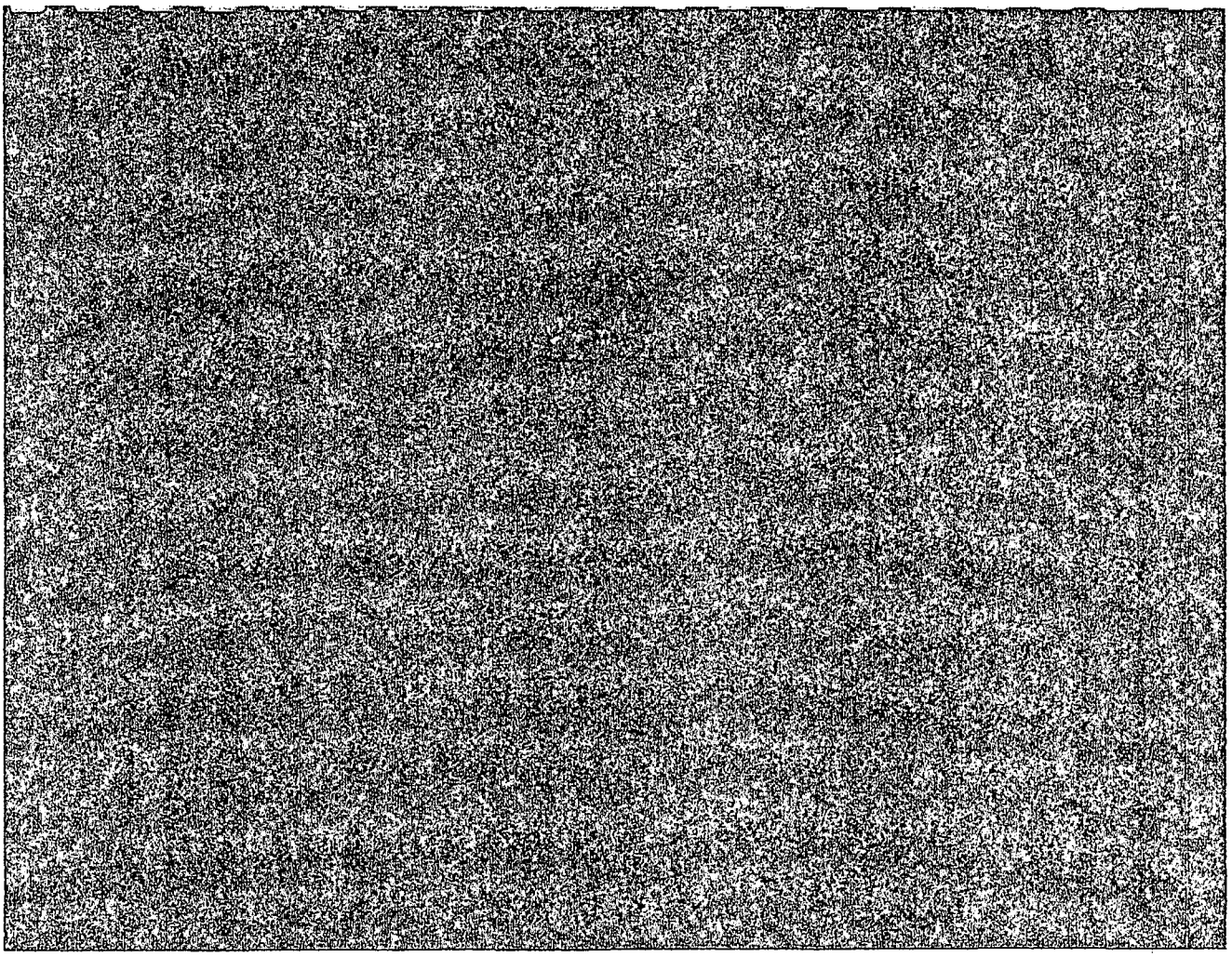

communications WESCAM	LASER CUTOUT DEFINITION FORM	FM1287 Rev -

Customer Name: _____ Date: _____

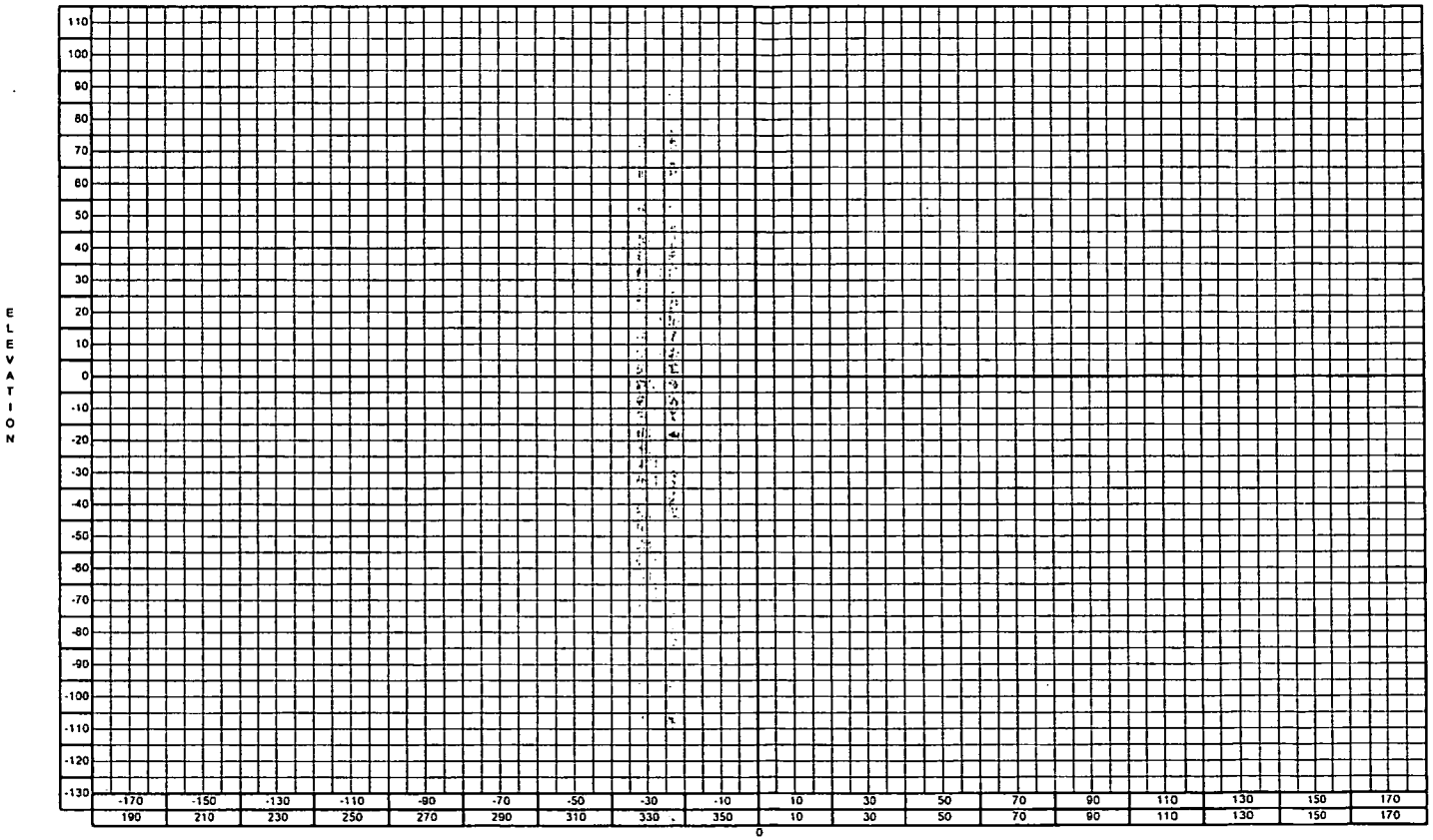

L-3 WESCAM 649 NORTH SERVICE ROAD W. BURLINGTON ONTARIO CANADA L7P 5B9
Phone : 905-633-4000 Fax : 905-633-4100

Approval : _____

Customer Signature

NOTES:

1. FOR THE FOLLOWING SURVEILLANCE SYSTEMS,
   A MAXIMUM OF 9 RECTANGULAR CUTOUTS ZONES PER MAP ARE ALLOWED :
   ANALOG SYSTEMS: MX15, MX20, MX15i,
   DIGITAL SYSTEMS: MX15HDi

2. FOR DESIGNATOR SYSTEMS, THE LASERS ARE CUTOUT
   BEYOND -85 DEGREES LOOKBACK ANGLES BY DEFAULT

3. ALTHOUGH THE GRAPH SHOWS 5 DEGREE
   RESOLUTION IN AZIMUTH AND ELEVATION,
   THE LASER CUTOUT CAN BE DEFINED TO 1 DEG RESOLUTION
   CUSTOMER TO CLEARLY IDENTIFY THE EXACT CUTOUT
   ANGLES VALUES REQUIRED, (CORNERS OF THE RECTANGULAR CUTOUTS)

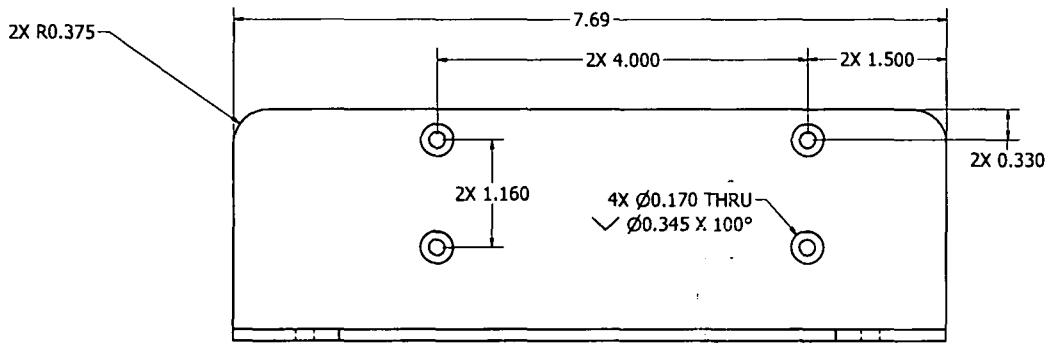

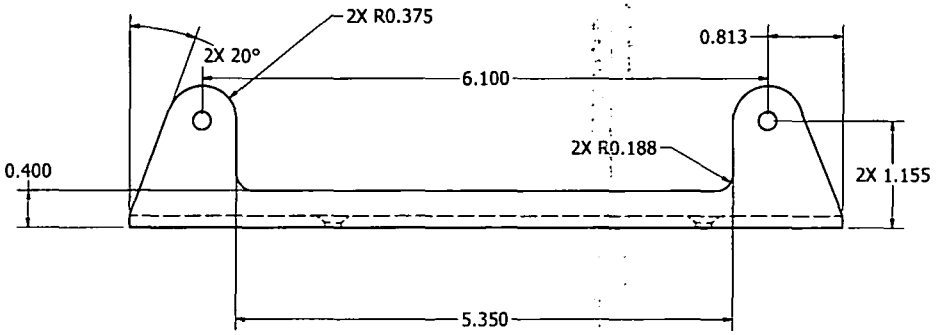

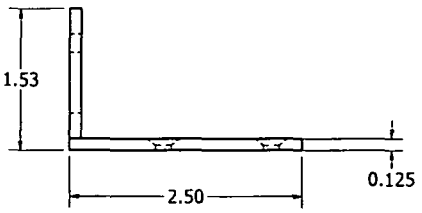

C206ARS-1000-21
MATERIAL: 6061-T6
FINISH: BLACK POLYESTER POWDER COAT CARDINAL P/N: C241-BK303

Paravion Technology Inc	TITLE: C206 CHURCHILL ARS EQUIPMENT				DRAWING NUMBER: C206ARS-1000
DIMENSIONS IN INCHES TOLERANCES EXCEPT WHERE NOTED .X = ±.1 .XX = ±.05 .XXX = ±.010 ANGLES = ± 1° THREADS INTERNAL: CLASS 2B EXTERNAL: CLASS 2A	DRAWN BY: DGW	CHK'D BY	APPV'D BY	DATE: 2/28/13	REV: A / ECO
	3RD ANGLE PROJECTION	DO NOT SCALE DRAWING			SHEET 1 OF 12

PROTO	4

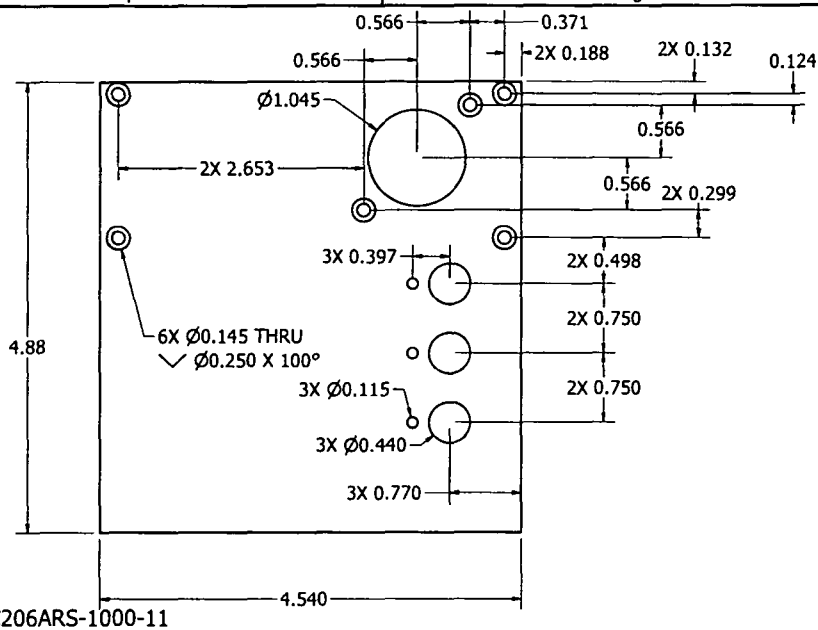

C206ARS-1000-11
MATERIAL: 0.063" 6061-T6
FINISH: BLACK POLYESTER POWDER COAT CARDINAL P/N: C241-BK303

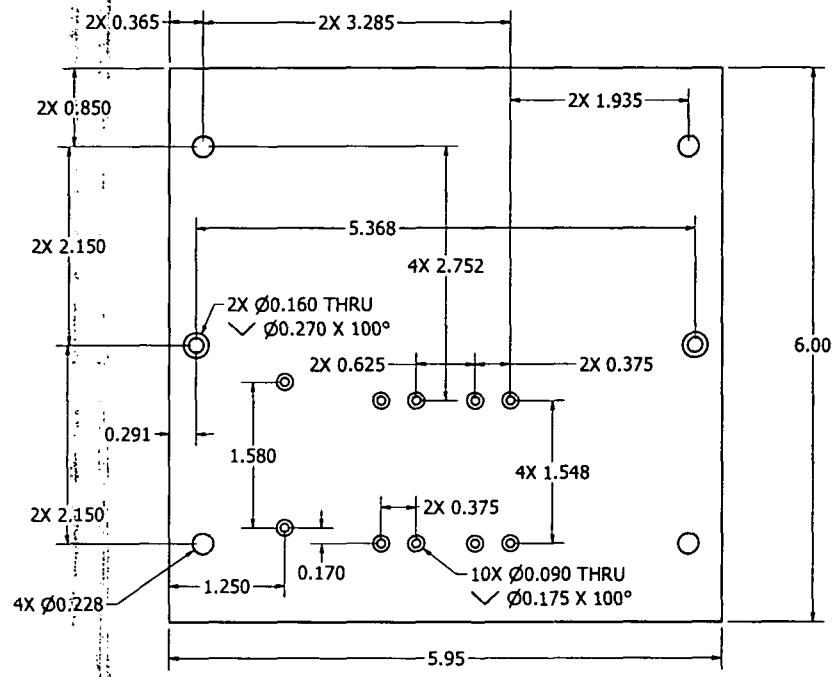

C206ARS-1000-10
MATERIAL: 0.063" 6061-T6
FINISH: BLACK POLYESTER POWDER COAT CARDINAL
P/N: C241-BK303

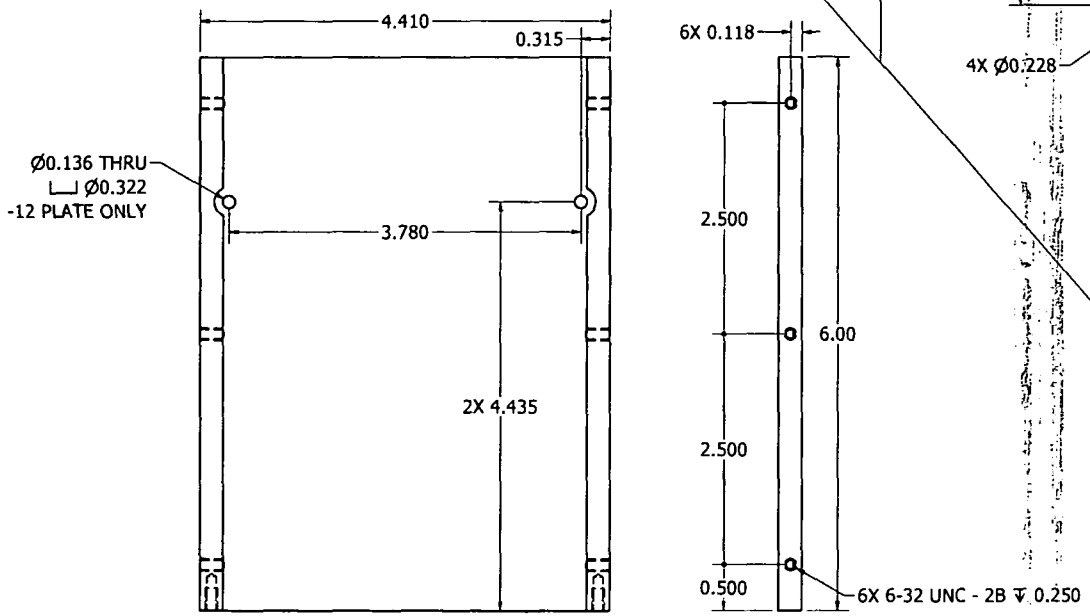

C206ARS-1000-12 & -22
MATERIAL: 0.250" 6061-T6
FINISH: BLACK POLYESTER POWDER COAT CARDINAL
P/N: C241-BK303

BREAK ALL SHARP EDGES

Paravion Technology Inc.	TITLE: C206 CHURCHILL ARS EQUIPMENT			DRAWING NUMBER C206ARS-1000	
DIMENSIONS IN INCHES TOLERANCES EXCEPT WHERE NOTED .X = ±.1 .XX = ±.05 .XXX = ±.010 ANGLES = ± 1°	DRAWN BY DGW	CHK'D BY	APRV'D BY	DATE 2/28/13	REV A	ECO
THREADS INTERNAL: CLASS 2B EXTERNAL: CLASS 2A	3RD ANGLE PROJECTION	DO NOT SCALE DRAWING		SHEET 2 OF 12		

PAGE 4

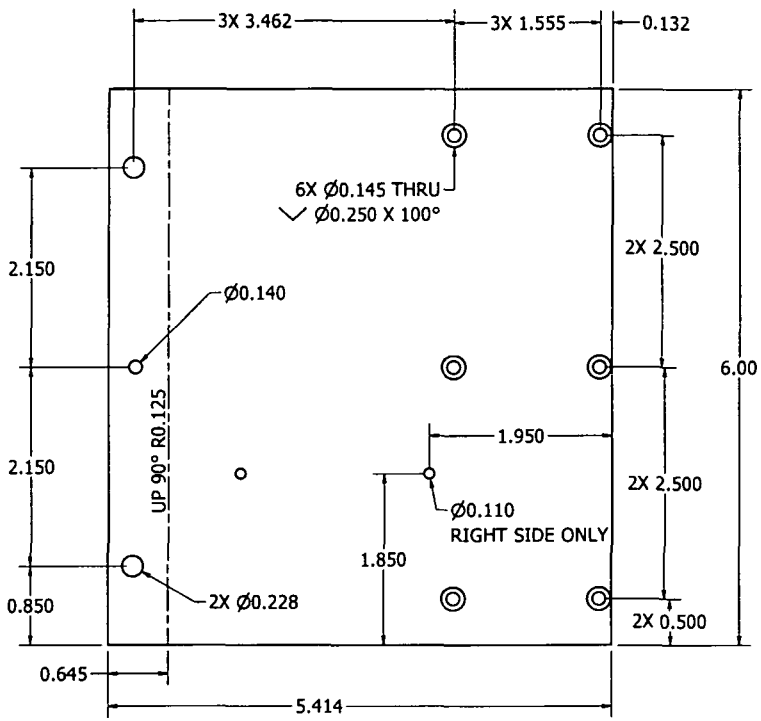

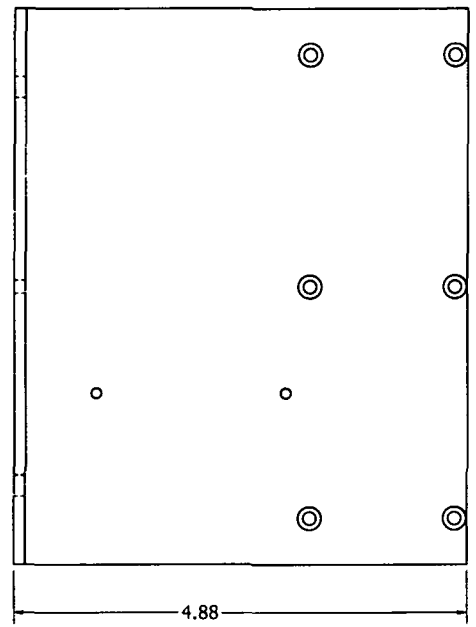

C206ARS-1000-13L/R
MATERIAL: 0.063" 6061-T6
FINISH: BLACK POLYESTER POWDER COAT CARDINAL
P/N: C241-BK303

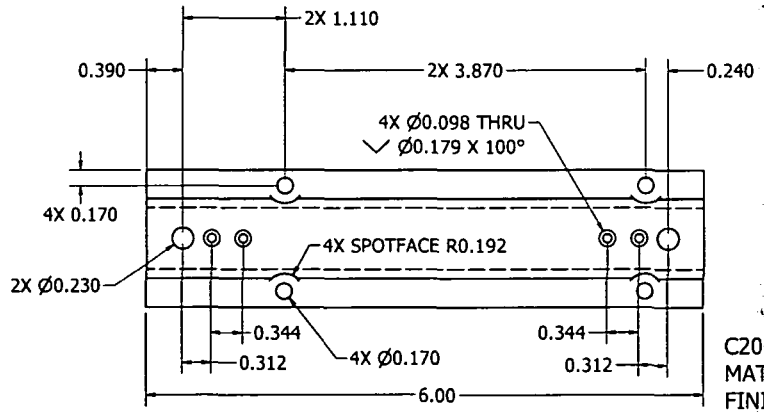

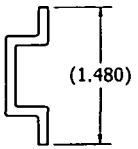

C206ARS-1000-18
MATERIAL: ES37200-1
FINISH: BLACK POLYESTER POWDER COAT CARDINAL
P/N: C241-BK303

Paravion Technology Inc.	TITLE: C206 CHURCHILL ARS EQUIPMENT				DRAWING NUMBER: C206ARS-1000	
DIMENSIONS IN INCHES TOLERANCES EXCEPT WHERE NOTED .X = ±.1 .XX = ±.05 .XXX = ±.010 ANGLES = ± 1°	DRAWN BY: DGW	CHK'D BY	APPV'D BY	DATE: 2/28/13	REV: A	ECO
THREADS INTERNAL: CLASS 2B EXTERNAL: CLASS 2A	3RD ANGLE PROJECTION	DO NOT SCALE DRAWING			SHEET 3 OF 12	

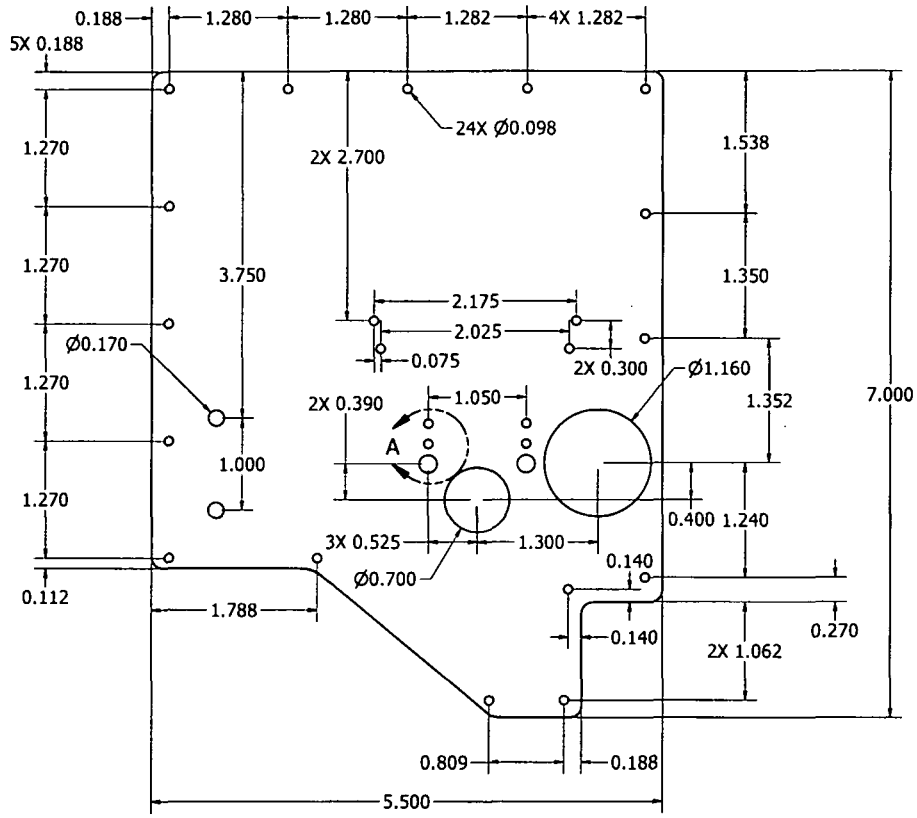

C206ARS-1000-14
MATERIAL: 0.063" 6061-T6
FINISH: BLACK POLYESTER POWDER COAT CARDINAL
P/N: C241-BK303

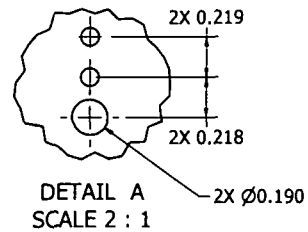

DETAIL A
SCALE 2 : 1

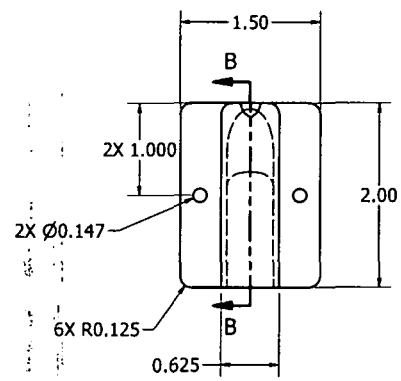

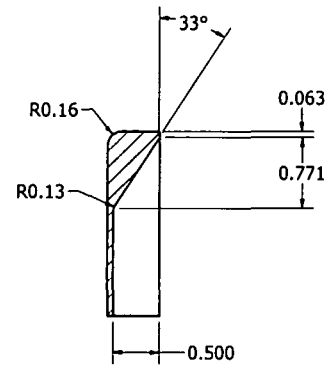

SECTION B-B
SCALE 1 : 1

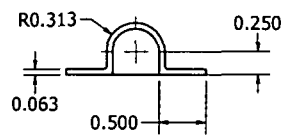

C206ARS-1000-23
MATERIAL: 6061-T6
FINISH: BLACK POLYESTER POWDER COAT CARDINAL P/N: C241-BK303

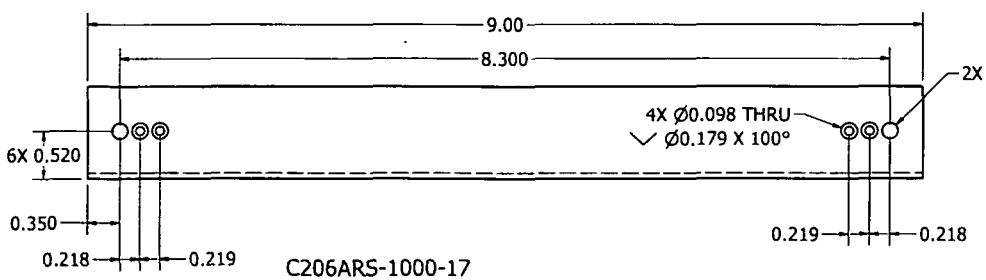

C206ARS-1000-17
MATERIAL: 1" X 1" x 0.063" ANGLE 6063-T52
FINISH: BLACK POLYESTER POWDER COAT CARDINAL
P/N: C241-BK303

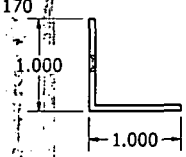

MOTO	4

Paravion Technology Inc

DIMENSIONS IN INCHES
TOLERANCES EXCEPT WHERE NOTED
.X = ±.1
.XX = ±.05
.XXX = ±.010
ANGLES = ± 1°
THREADS
INTERNAL: CLASS 2B
EXTERNAL: CLASS 2A

3RD ANGLE PROJECTION

TITLE: C206 CHURCHILL ARS EQUIPMENT

DRAWING NUMBER: C206ARS-1000

DRAWN BY	CHK'D BY	APRV'D BY	DATE	REV	ECO
DGW			2/28/13	A	

DO NOT SCALE DRAWING

SHEET 4 OF 12

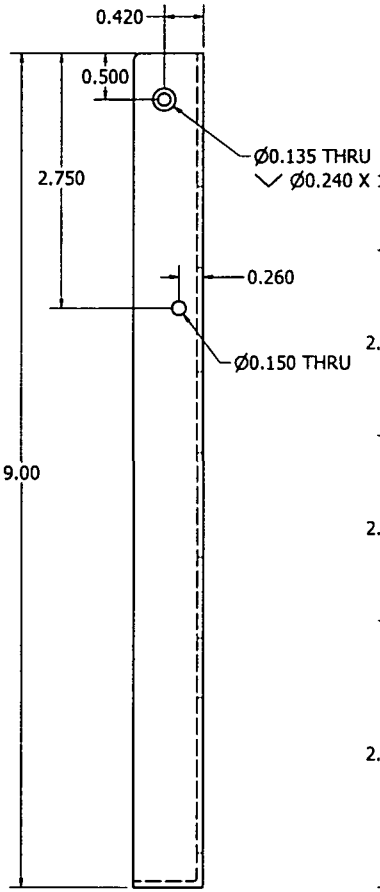

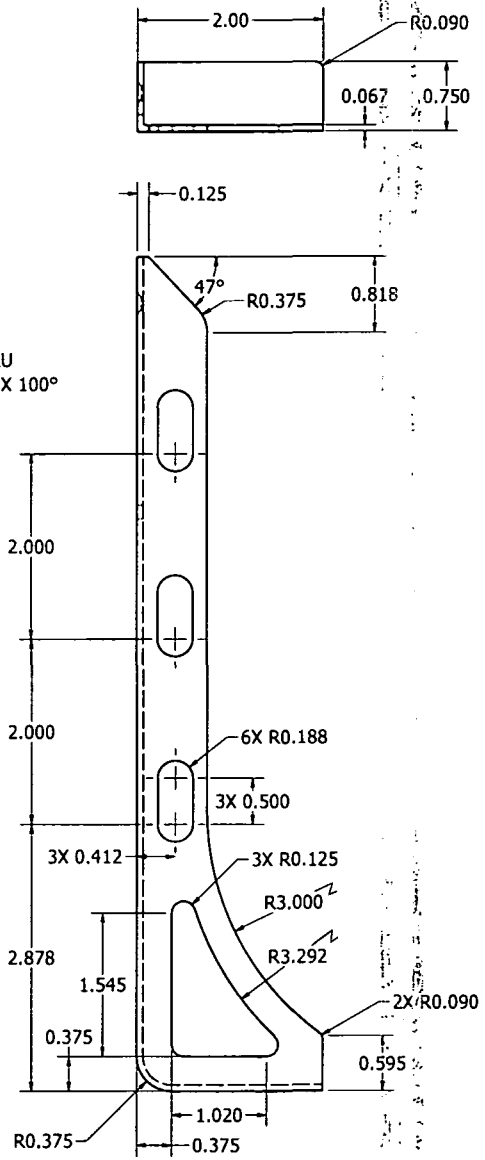

C206ARS-1000-15, -24
MATERIAL: 6061-T6
FINISH: BLACK POLYESTER POWDER COAT CARDINAL
P/N: C241-BK303
C206ARS-1000-19 MIRROR IMAGE

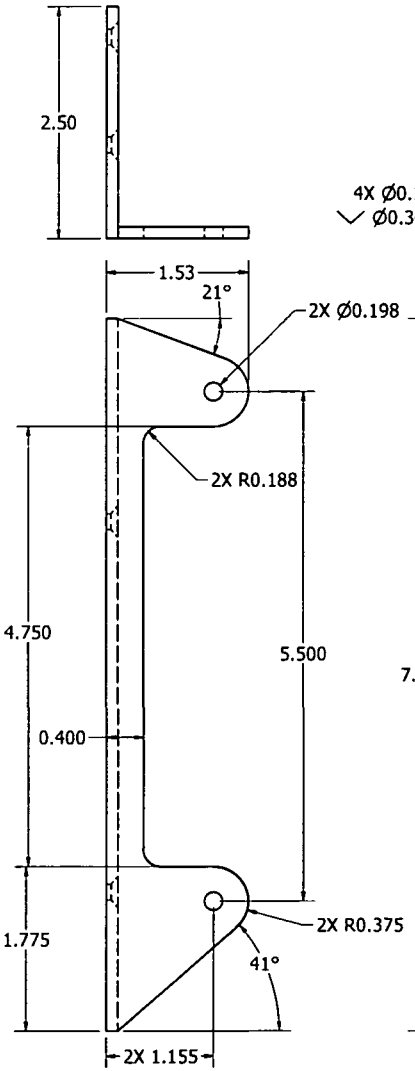

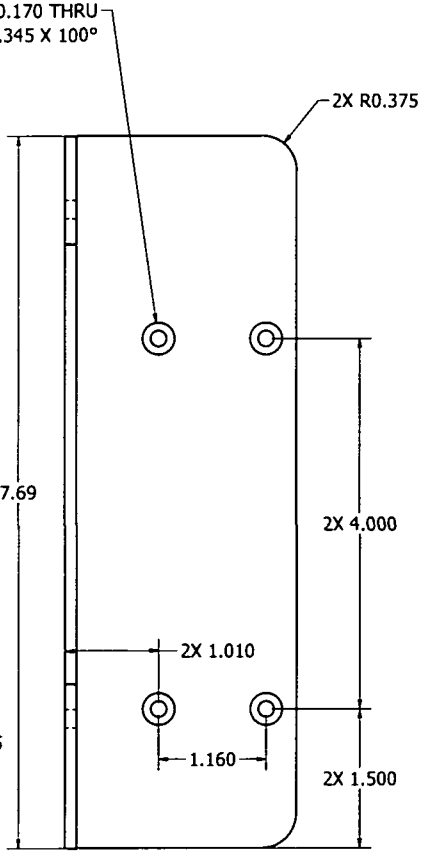

C206ARS-1000-16
MATERIAL: 6061-T6 0.125" THICK ANGLE
FINISH: BLACK POLYESTER POWDER COAT CARDINAL
P/N: C241-BK303

Paravion Technology Inc	TITLE: C206 CHURCHILL ARS EQUIPMENT			DRAWING NUMBER: C206ARS-1000	
DIMENSIONS IN INCHES TOLERANCES EXCEPT WHERE NOTED .X = ±.1 .XX = ±.05 .XXX = ±.010 ANGLES = ± 1° THREADS INTERNAL: CLASS 2B EXTERNAL: CLASS 2A	DRAWN BY: DGW	CHK'D BY	APPV'D BY	DATE: 2/28/13	REV: A / ECO
3RD ANGLE PROJECTION	DO NOT SCALE DRAWING			SHEET 5 OF 12	
	© 2012 PARAVION TECH INC. PARAVION IS A TRADEMARK OF PARAVION TECHNOLOGY INC				
-CONFIDENTIAL INFORMATION- THE INFORMATION AND DATA CONTAINED HEREIN IS PROPRIETARY AND IS SUBMITTED IN CONFIDENCE, AND SHALL NOT BE DISCLOSED, USED OR DUPLICATED FOR ANY PURPOSE WHATSOEVER WITHOUT THE PRIOR WRITTEN PERMISSION OF PARAVION TECHNOLOGY, INC.	MATL/TO 4				

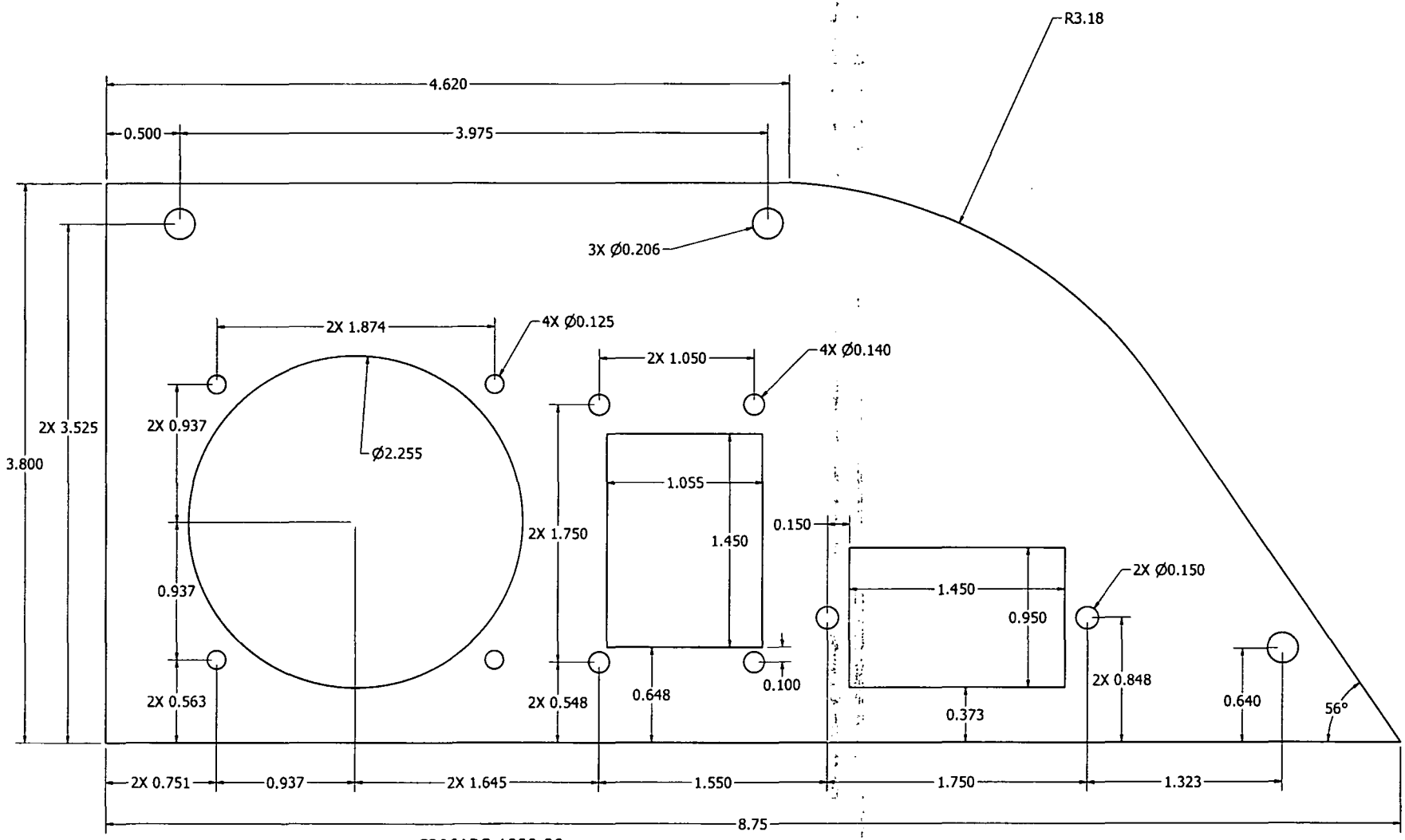

C206ARS-1000-20
MATERIAL: 6061-T6 0.063"
FINISH: BLACK POLYESTER POWDER COAT CARDINAL
P/N: C241-BK303

Paravion Technology Inc

TITLE: C206 CHURCHILL ARS EQUIPMENT

DRAWING NUMBER: C206ARS-1000

DIMENSIONS IN INCHES
TOLERANCES EXCEPT WHERE NOTED
.X = ±.1
.XX = ±.05
.XXX = ±.010
ANGLES = ± 1°
THREADS:
INTERNAL: CLASS 2B
EXTERNAL: CLASS 2A

DRAWN BY	CHK'D BY	APPV'D BY	DATE	REV	ECO
DGW			2/28/13	A	

3RD ANGLE PROJECTION

DO NOT SCALE DRAWING

SHEET 6 OF 12

MOTU 4

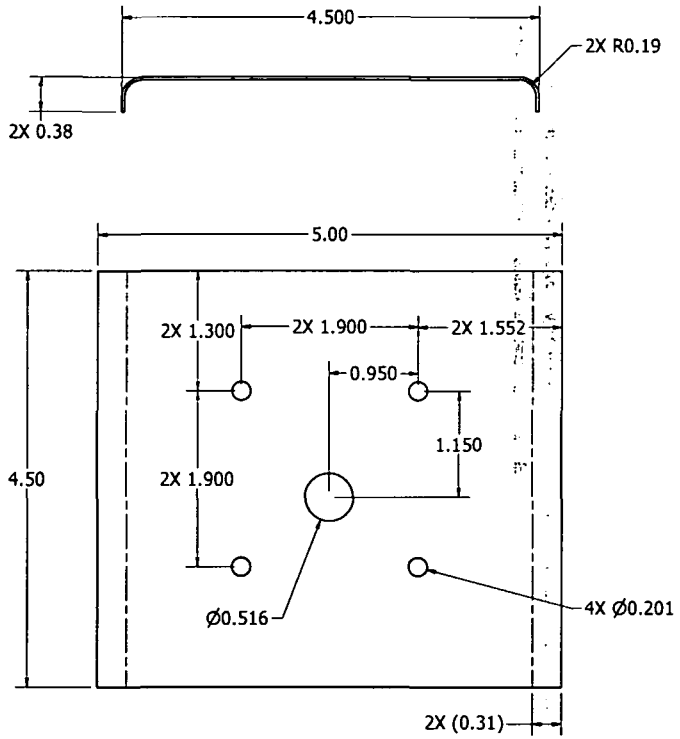

C206ARS-1000-25
MATERIAL: 6061-T6 0.032"
FINISH: BLACK POLYESTER POWDER COAT CARDINAL
P/N: C241-BK303

Paravion Technology Inc	TITLE C206 CHURCHILL ARS EQUIPMENT				DRAWING NUMBER C206ARS-1000		
DIMENSIONS IN INCHES TOLERANCES EXCEPT WHERE NOTED .X = ±.1 .XX = ±.05 .XXX = ±.010 ANGLES = ± 1°	DRAWN BY DGW	CHK'D BY	APPV'D BY	DATE 2/28/13	REV A	ECO	
THREADS INTERNAL: CLASS 2B EXTERNAL: CLASS 2A	3RD ANGLE PROJECTION	DO NOT SCALE DRAWING			SHEET 7 OF 12		
		© 2012 PARAVION TECH. INC. PARAVION IS A TRADEMARK OF PARAVION TECHNOLOGY INC.					
PHOTO 4							

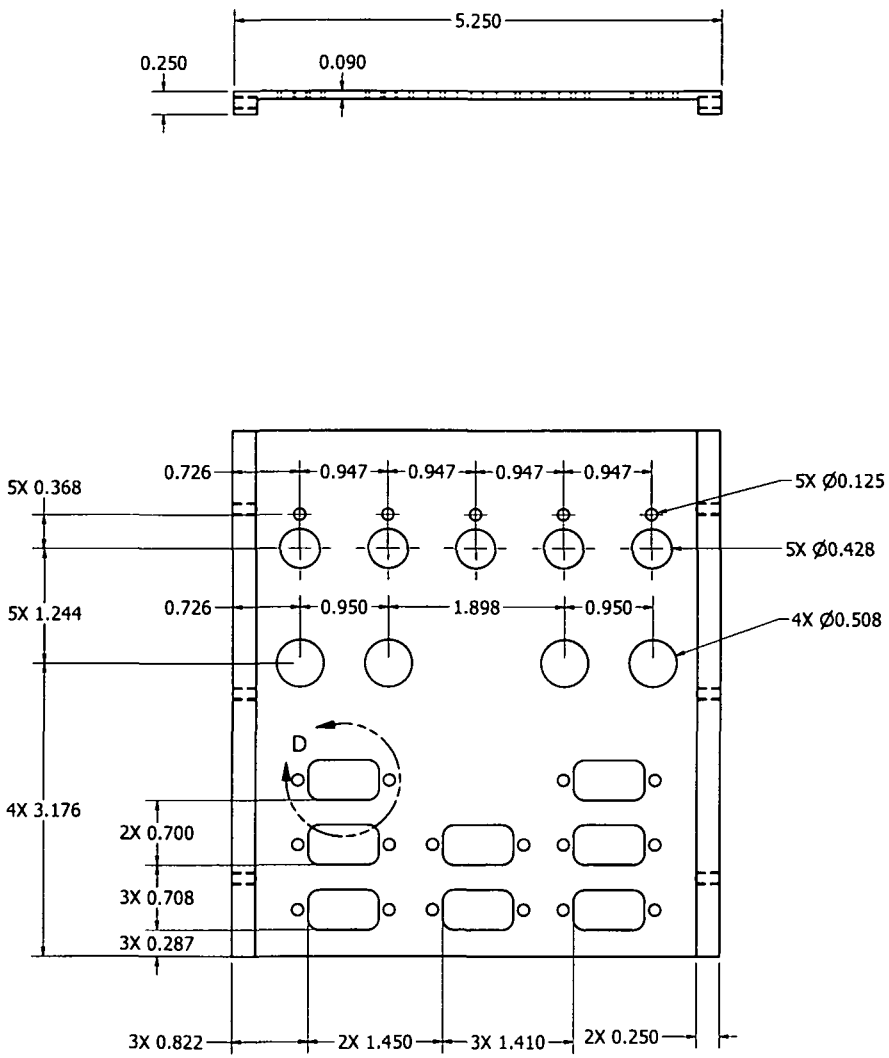

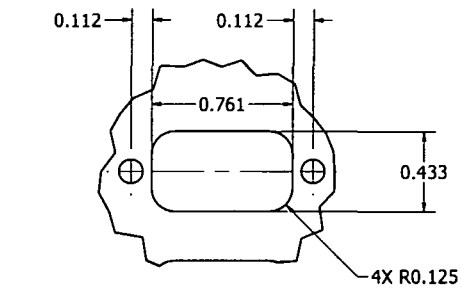

DETAIL D
SCALE 2 : 1

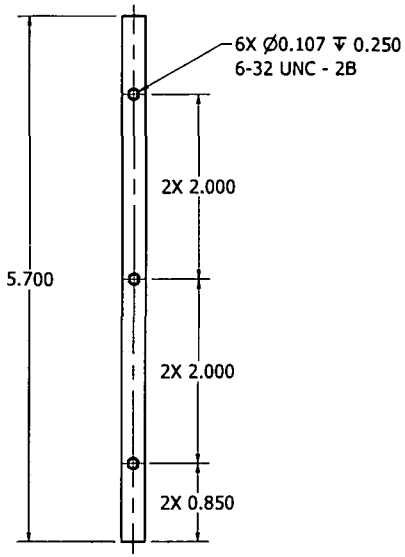

C206ARS-1000-27
MATERIAL: 6061-T6 1/4" X 6" BAR
SPEC: QQ-A-250/11 ASTM-B221
FINISH: BLACK POLYESTER POWDER COAT CARDINAL
P/N: C241-BK303

Paravion Technology Inc	TITLE: C206 CHURCHILL ARS EQUIPMENT				DRAWING NUMBER: C206ARS-1000	
DIMENSIONS IN INCHES TOLERANCES EXCEPT WHERE NOTED .X = ±.1 .XX = ±.05 .XXX = ±.010 ANGLES = ± 1°	DRAWN BY	CHK'D BY	APRV'D BY	DATE	REV	ECO
	DGW			2/28/13	A	
THREADS INTERNAL: CLASS 2B EXTERNAL: CLASS 2A	3RD ANGLE PROJECTION	DO NOT SCALE DRAWING			SHEET 8 OF 12	

PROTO 4

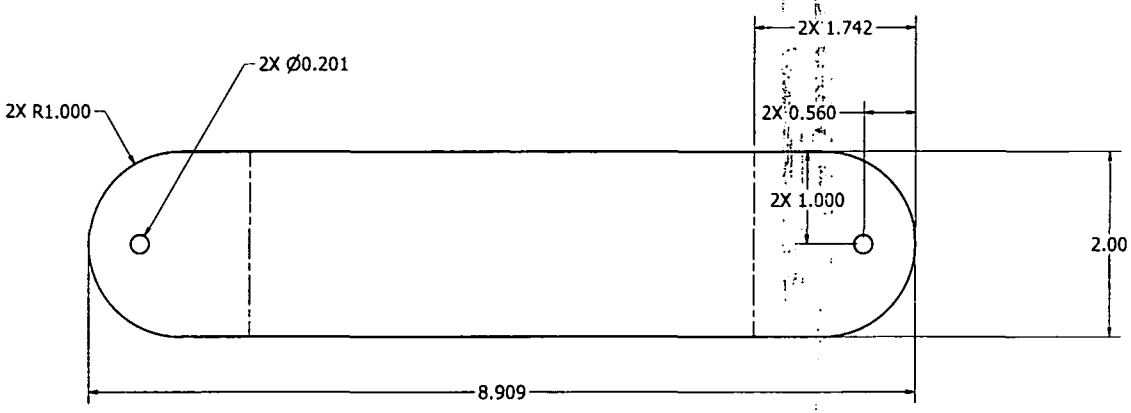

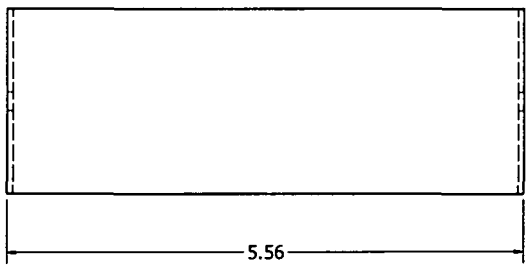

-28
MATERIAL: 6061-T6 0.063" SHEET
BEND RADII: 0.125"
FINISH: BLACK POLYESTER POWDER COAT CARDINAL
P/N: C241-BK303

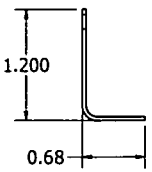

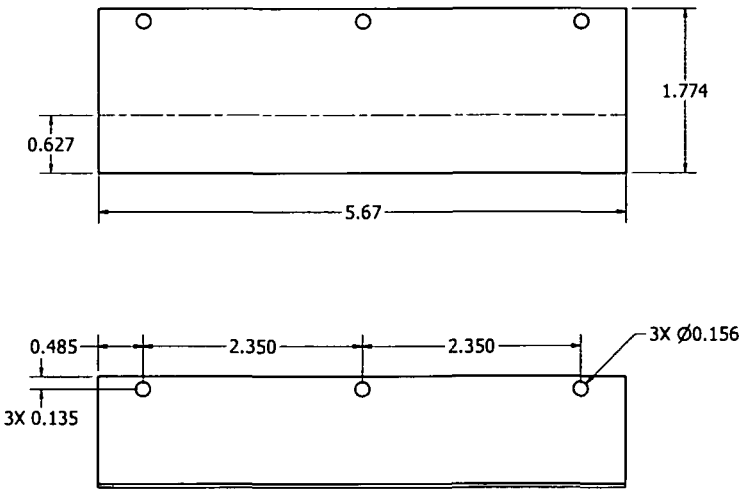

-29
MATERIAL: 6061-T6 0.040" SHEET
BEND RADII: 0.125"
FINISH: BLACK POLYESTER POWDER COAT CARDINAL
P/N: C241-BK303

Paravion Technology Inc	TITLE C206 CHURCHILL ARS EQUIPMENT				DRAWING NUMBER C206ARS-1000	
DIMENSIONS IN INCHES TOLERANCES EXCEPT WHERE NOTED .X = ±.1 .XX = ±.05 .XXX = ±.010 ANGLES = ± 1° THREADS INTERNAL: CLASS 2B EXTERNAL: CLASS 2A	DRAWN BY	CHK'D BY	APPV'D BY	DATE	REV	ECO
	DGW			2/28/13	A	
	2ND ANGLE PROJECTION	DO NOT SCALE DRAWING			SHEET 9 OF 12	
-CONFIDENTIAL INFORMATION- THE INFORMATION AND DATA CONTAINED HEREIN IS PROPRIETARY AND IS SUBMITTED IN CONFIDENCE, AND SHALL NOT BE DISCLOSED, USED OR DUPLICATED FOR ANY PURPOSE WHATSOEVER WITHOUT THE PRIOR WRITTEN PERMISSION OF PARAVION TECHNOLOGY, INC	PHOTO 4	© 2012 PARAVION TECH. INC. PARAVION IS A TRADEMARK OF PARAVION TECHNOLOGY INC.				

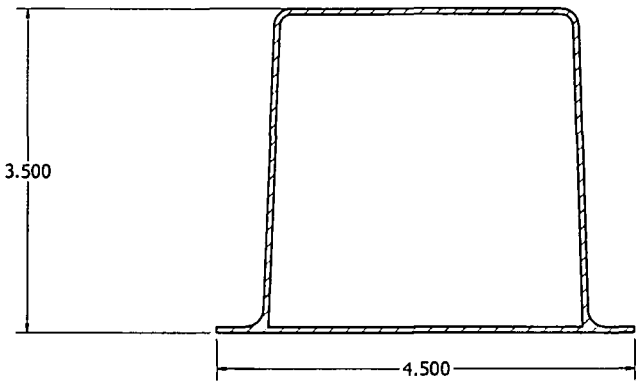

SECTION C-C
SCALE 1 : 1

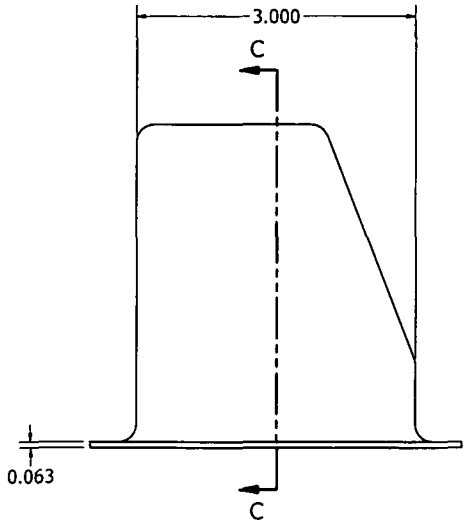

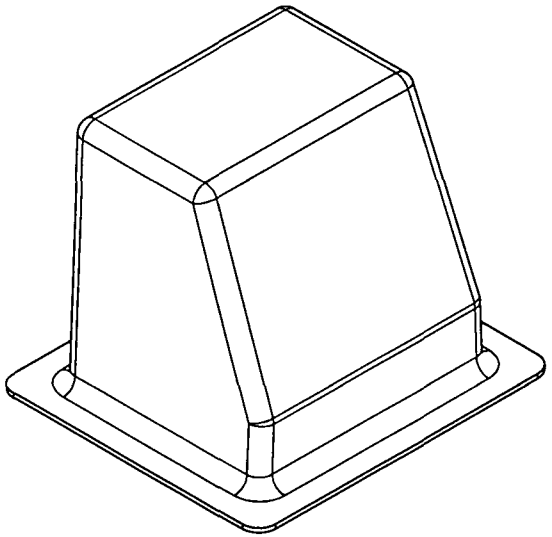

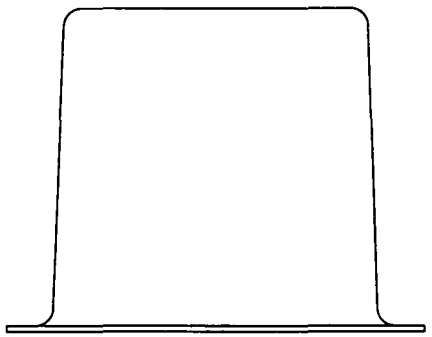

C206ARS-1000-26
MATERIAL:1x1 Plain Weave Carbon & 2x2 Twill 3K Carbon
RESIN: LAM-135-FR
HARDNER:LAM-229

Paravion Technology Inc	TITLE: C206 CHURCHILL ARS EQUIPMENT				DRAWING NUMBER: C206ARS-1000		
DIMENSIONS IN INCHES TOLERANCES EXCEPT WHERE NOTED: .X = ±.1 .XX = ±.05 .XXX = ±.010 ANGLES = ± 1° THREADS INTERNAL: CLASS 2B EXTERNAL: CLASS 2A	DRAWN BY	CHK'D BY	APPV'D BY	DATE	REV	ECO	
	DGW			2/28/13	A		
	3RD ANGLE PROJECTION	DO NOT SCALE DRAWING			SHEET 10 OF 12		
		© 2012 PARAVION TECH. INC. PARAVION IS A TRADEMARK OF PARAVION TECHNOLOGY INC.					
PIC/TU 4							

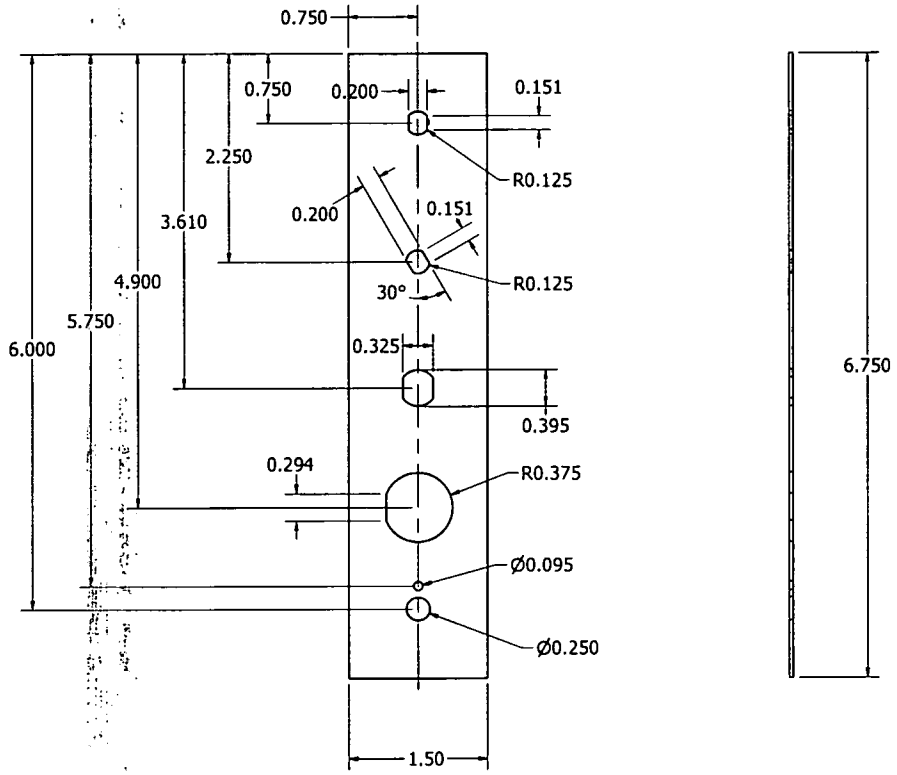

-31
MATERIAL: 6061-T6 0.040" SHEET
FINISH: BLACK POLYESTER POWDER COAT CARDINAL
P/N: C241-BK303

PHOTO 4

Paravion Technology Inc.

DIMENSIONS IN INCHES
TOLERANCES EXCEPT WHERE NOTED
.X = ±.1
.XX = ±.05
.XXX = ±.010
ANGLES = ± 1°
THREADS
INTERNAL: CLASS 2B
EXTERNAL: CLASS 2A

3RD ANGLE PROJECTION

TITLE: C206 CHURCHILL ARS EQUIPMENT

DRAWING NUMBER: C206ARS-1000

DRAWN BY	CHK'D BY	APPV'D BY	DATE	REV	ECO
DGW			2/28/13	A	

DO NOT SCALE DRAWING

SHEET 11 OF 12

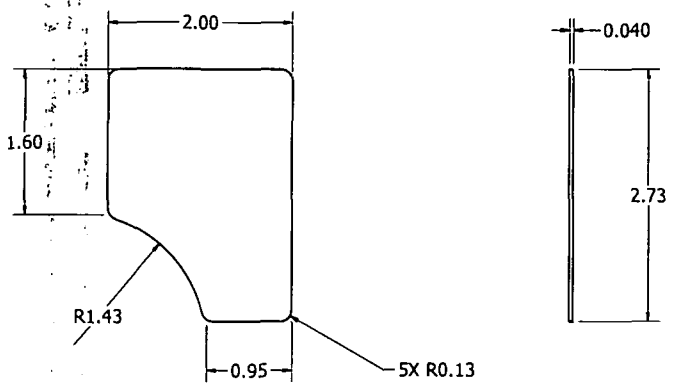

-30
MATERIAL: 6061-T6 0.040"
FINISH: BLACK POLYESTER POWDER COAT CARDINAL
P/N: C241-BK303
ALT: C182ARS-1000-36

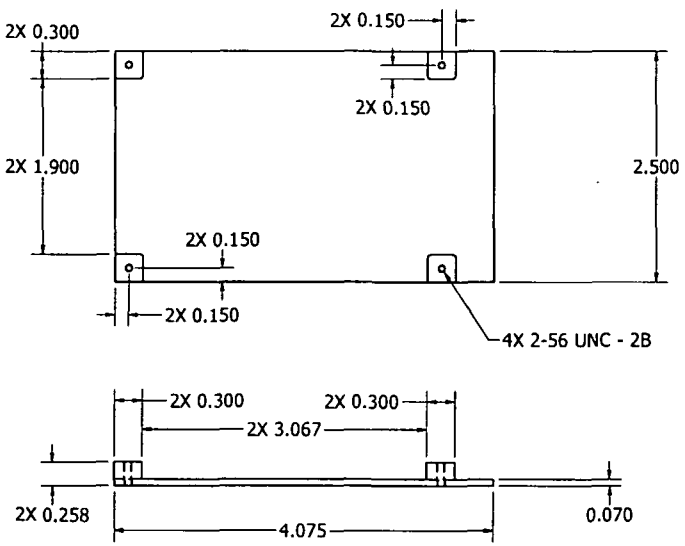

-32
MATERIAL: 6061-T6
FINISH: BLACK POLYESTER POWDER COAT CARDINAL
P/N: C241-BK303
ALT: C182ARS-1000-34

Paravion® Technology Inc.	TITLE C206 CHURCHILL ARS EQUIPMENT			DRAWING NUMBER C206ARS-1000	
DIMENSIONS IN INCHES TOLERANCES EXCEPT WHERE NOTED .X = ±.1 .XX = ±.05 .XXX = ±.010 ANGLES = ± 1° THREADS INTERNAL: CLASS 2B EXTERNAL: CLASS 2A	DRAWN BY DGW	CHK'D BY	APRV'D BY	DATE 2/28/13	REV A / ECO
	3RD ANGLE PROJECTION	DO NOT SCALE DRAWING		SHEET 12 OF 12	

PM/TU 4

Bill of Materials

*IR-440-1, REV. N/C

ITEM #	P/N	DESCRIPTION	QTY	TYP
0	*IR-440-1, REV. N/C	GIMBAL ADAPTER ASSY	1	KIT
1	IR-606-1	SUPPORT PLATE	4	EA
2	MS16998-44	BOLT	4	EA
3	NAS1149C0463R	WASHER	1	EA
4	MS24693S279	SCREW	1	EA
5	NAS43DD3-32FC	SPACER	1	EA
6	NAS1149F0332P	WASHER	1	EA
7	MS21042L3	NUT	1	EA

SHEET	REV	ECO	DATE	DESCRIPTION	BY	APR	CHK

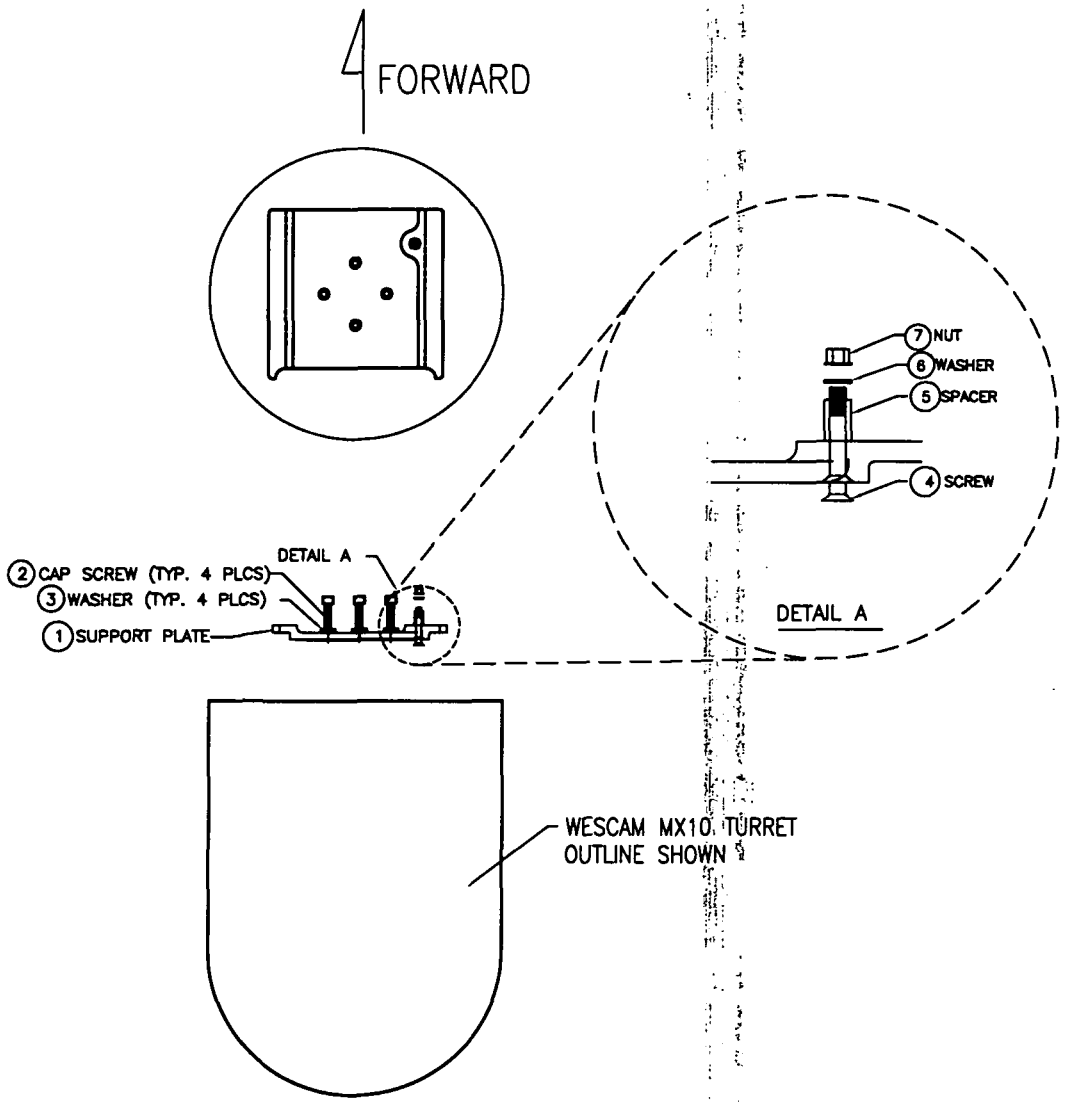

-1 ASSEMBLY

PROTO
1

Paravion® Technology Inc.

DIMENSIONS IN INCHES
TOLERANCES EXCEPT WHERE NOTED:
.X = ± .1
.XX = ± .05
.XXX = ± .010
ANGLES = ± 1°

TITLE: GIMBAL ADAPTER

DRAWING NO. IR-440

DRAWN BY	APRVD. BY	CHK'D BY	DATE	REV	ECO
REB	REB	CEH	02/17/2012	N/C	–

DO NOT SCALE DRAWING

SHEET 1 OF 1

The installation is to be inspected in accordance with the following criteria or equivalent operator's Approved Airworthiness Inspection Program:

1.0 INTRODUCTION

These Instructions for Continued Airworthiness contain the necessary information for carrying out the ongoing maintenance and inspections on the installation of an IR-605-1 Support Plate on a Cessna 206 aircraft in accordance with FAA Form 337 dated _____.

2.0 DESCRIPTION

Paravion Technology drawing IR-605 describes the support plate used as provisions for a Wecam MX-10 camera. The plate is installed in the belly of the aircraft at approximately the center of the fuselage along the centerline of the aircraft. It weighs approximately 1.6 lbs and is installed using 4 x NAS1351C4 screws.

3.0 CONTROL, OPERATION INFORMATION

N/A

4.0 SERVICING INFORMATION

N/A

5.0 MAINTENANCE INSTRUCTIONS

The inspection program for this installation consists of a 12-month annual inspection for the condition of the support plate and associated components. This inspection is a complete visual inspection requiring only a single logbook entry.

12-Month Inspection

A. Inspect condition of support plate and all associated mounting structure for loose hardware or damage, i.e. bent, cracked or dented structures, and repair or replace as necessary.

The 12-month inspections shall be accomplished by an appropriately rated mechanic assigned to this aircraft and can be accomplished earlier to match up with other aircraft inspections.

6.0 TROUBLESHOOTING

N/A

7.0 REMOVAL AND REPLACEMENT INSTRUCTIONS

A. Paravion Technology drawing IR-605 (provided) shows the details of the support plate and report number ER-C206ELP-2 shows the installation of the plate and can be used as a reference in the event the plate needs to be removed and replaced.

8.0 DIAGRAMS

N/A

9.0 SPECIAL INSPECTION REQUIREMENTS
N/A

10.0 APPLICATION OF PROTECTIVE TREATMENTS
N/A

11.0 STRUCTURAL DATA
N/A

12.0 LIST OF SPECIAL TOOLS
N/A

13.0 FOR COMMUTER CATEGORY AIRCRAFT
N/A

14.0 RECOMMENDED OVERHAUL INTERVALS
No additional overhaul time limitations.

15.0 AIRWORTHINESS LIMITATIONS
The Airworthiness Limitations section is FAA approved and specifies inspections and other maintenance required under §43.16 and §91.403 of the Federal Aviation Regulations unless an alternative program has been FAA approved.
No additional airworthiness limitations.

16.0 REVISIONS
ICAs are required to be acceptable to the FAA. As such, changes should be documented by submitting the revised ICA along with the original Form 337 to the Aircraft Registration Branch in Oklahoma City. An entry in the aircraft records should indicate the current revision.

******* NOTHING FOLLOWS *******

U.S Department of Transportation
Federal Aviation Administration

MAJOR REPAIR AND ALTERATION
(Airframe, Powerplant, Propeller, or Appliance)

Form Approved
OMB No. 2120-0020
11/30/2007

Electronic Tracking Number

For FAA Use Only

INSTRUCTIONS: Print or type all entries. See FAR 43.9, FAR 43 Appendix B, and AC 43.9-1 (or subsequent revision thereof) for instructions and disposition of this form. This report is required by law (49 U.S.C. 1421). Failure to report can result in a civil penalty not to exceed $1,000 for each such violation (Section 901 Federal Aviation Act 1958)

1. Aircraft	Nationality and Registration Mark USA N959JT	Serial No. T20608983	
	Make CESSNA	Model T206H	Series STATIONAIR
2. Owner	Name *(As shown on registration certificate)* CESSNA AIRCRAFT COMPANY	Address *(As shown on registration certificate)* Address ATTN: DEPT 093 3 CESSNA BLVD City WICHITA State KANSAS Zip 67215-1400 Country USA	

3. For FAA Use Only

4. Type		5. Unit Identification			
Repair	Alteration	Unit	Make	Model	Serial Number
☐	☒	AIRFRAME	—	*(As described in Item 1 above)*	—
☐	☐	POWERPLANT			
☐	☐	PROPELLER			
☐	☐	APPLIANCE	Type Manufacturer		

6. Conformity Statement

A. Agency's Name and Address	B. Kind of Agency			
Name YINGLING AVIATION	☐	U.S. Certificated Mechanic	☐	Manufacturer
Address 2010 AIRPORT ROAD	☐	Foreign Certificated Mechanic	C. Certificate No.	
City WICHITA State KS	☒	Certificated Repair Station	YN8R621Y RADIO CLASS 1,2,3	
Zip 67277 Country USA	☐	Certificated Maintenance Organization		

D. I certify that the repair and/or alteration made to the unit(s) identified in item 5 above and described on the reverse or attachments hereto have been made in accordance with the requirements of Part 43 of the U.S. Federal Aviation Regulations and that the information furnished herein is true and correct to the best of my knowledge.

Extended range fuel per 14 CFR Part 43 App. B ☐	Signature/Date of Authorized Individual 11/11/10

7. Approval for Return to Service

Pursuant to the authority given persons specified below, the unit identified in item 5 was inspected in the manner prescribed by the Administrator of the Federal Aviation Administration and is ☒ APPROVED ☐ REJECTED

BY		FAA Flt Standards Inspector		Manufacturer		Maintenance Organization		Person Approved by Canadian Department of Transport
		FAA Designee	X	Repair Station		Inspection Authorization		Other *(Specify)*

Certificate or Designation No. YN8R621Y	Signature/Date of Authorized Individual 11/11/10

FAA Form 337 (10-06)

NOTICE

Weight and balance or operating limitation changes shall be entered in the appropriate aircraft record. An alteration must be compatible with all previous alterations to assure continued conformity with the applicable airworthiness requirements.

8. Description of Work Accomplished

(If more space is required, attach additional sheets. Identify with aircraft nationality and registration mark and date work completed.)

USA N959JT	11/11/10
Nationality and Registration Mark	Date

CESSNA T206H – T20608983– N959JT

INSTALLED SYSTEMS: The following avionics equipment was installed IAW STC Number SA01552WI. Reference Yingling Aviation STC Master Data List, Document No. 23507-F206-M Revision IR dated August 3, 2009 or later approved revision.

Garmin GMA 1347 Audio Panel, 2 ea NAT (A711) Expansion Panels, NAT Audio Control System (A740), NAT Universal Audio Radio Interface, 3 ea Sandia Card Enclosures (SRU-1), 3 ea Sandia Relay Cards (SR-54), KGS Model RG28 DC to DC Converter, GPS Antenna CI-420-230, Marker Beacon Antenna Splitter CI509, and 2 ea Comant VHF/FM CI-292-3 Antennas.

OPERATIONAL GROUND CHECKS: Required ground tests were performed and all equipment was found to operate properly.

CONTINUED AIRWORTHINESS INSTRUCTIONS: Reference Yingling Aviation Document ICA 23507-F206-04 for Instructions for Continued Airworthiness.

WEIGHT & BALANCE and EQUIPMENT LIST: Revised Aircraft Weight & Balance and Equipment List. See Aircraft Weight & Balance records for details.

AFMS: FAA Approved Flight Manual Supplement Doc. No. AFMS Document 23507-F206-08, Rev.IR, dated August 12, 2009 inserted in the Airplane Flight Manual.

The above installation meets the requirements for static loading in accordance with A.C.43.13-2B Chapter 1 par. 106 through 114. No changes were noted to the compass system. Further details are on file at C.R.S. # YN8R621Y under W.O. # AVI 10096.

>>>>>>>>>>>>>>END<<<<<<<<<<<<<<<<

☐ Additional Sheets Are Attached

U.S Department of Transportation
Federal Aviation Administration

MAJOR REPAIR AND ALTERATION
(Airframe, Powerplant, Propeller, or Appliance)

Form Approved
OMB No. 2120-0020
11/30/2007

Electronic Tracking Number

For FAA Use Only

INSTRUCTIONS: Print or type all entries. See FAR 43.9, FAR 43 Appendix B, and AC 43.9-1 (or subsequent revision thereof) for instructions and disposition of this form. This report is required by law (49 U.S.C. 1421). Failure to report can result in a civil penalty not to exceed $1,000 for each such violation (Section 901 Federal Aviation Act 1958).

1. Aircraft	Nationality and Registration Mark USA N959JT	Serial No. T20608983	
	Make CESSNA	Model T206H	Series STATIONAIR
2. Owner	Name *(As shown on registration certificate)* CESSNA AIRCRAFT COMPANY	Address *(As shown on registration certificate)* Address ATTN: DEPT 093 3CESSNA BLVD City WICHITA State KANSAS Zip 67215-1400 Country USA	

3. For FAA Use Only

4. Type		5. Unit Identification			
Repair	Alteration	Unit	Make	Model	Serial Number
☐	☒	AIRFRAME	—	*(As described in Item 1 above)*	—
☐	☐	POWERPLANT			
☐	☐	PROPELLER			
☐	☐	APPLIANCE	Type Manufacturer		

6. Conformity Statement

A. Agency's Name and Address	B. Kind of Agency		
Name YINGLING AVIATION	☐ U.S. Certificated Mechanic	☐ Manufacturer	
Address 2010 AIRPORT ROAD	☐ ForeignCertificated Mechanic	C. Certificate No.	
City WICHITA State KS	☒ Certificated Repair Station	YN8R621Y RADIO CLASS 1,2,3	
Zip 67277 Country USA	☐ Certificated Maintenance Organization		

D. I certify that the repair and/or alteration made to the unit(s) identified in item 5 above and described on the reverse or attachments hereto have been made in accordance with the requirements of Part 43 of the U.S. Federal Aviation Regulations and that the information furnished herein is true and correct to the best of my knowledge.

Extended range fuel per 14 CFR Part 43 App. B ☐	Signature/Date of Authorized Individual Teofilo Ines Jr. 11/11/10

7. Approval for Return to Service

Pursuant to the authority given persons specified below, the unit identified in item 5 was inspected in the manner prescribed by the Administrator of the Federal Aviation Administration and is ☒ APPROVED ☐ REJECTED

BY								
		FAA Flt Standards Inspector		Manufacturer		Maintenance Organization		Person Approved by Canadian Department of Transport
		FAA Designee	X	Repair Station		Inspection Authorization		Other *(Specify)*

Certificate or Designation No. YN8R621Y	Signature/Date of Authorized Individual H C Sherd 11/11/10

FAA Form 337 (10-06)

NOTICE

Weight and balance or operating limitation changes shall be entered in the appropriate aircraft record. An alteration must be compatible with all previous alterations to assure continued conformity with the applicable airworthiness requirements.

8. Description of Work Accomplished

(If more space is required, attach additional sheets. Identify with aircraft nationality and registration mark and date work completed.)

USA N959JT	11/11/10
Nationality and Registration Mark	Date

CESSNA T206H– T20608983– N959JT

Installed Equipment: The following equipment was installed IAW Atlantic Aero STC SA03150AT-D. Installation of a Wulfsberg P-2000 FM Radio in accordance with Atlantic Aero Master Drawing List 24293001 Rev B dated 6/4/08.

Wulfsberg P-2000VHF Digital/Analog Tactical FM Radio:

- Wulfsberg FM Transceiver P-2000VHF P/N 400-049200-11-011-2135-2135, 3.7 lbs @ arm 15.3
- Comant VHF FM (bent whip) Antenna P/N CI292-3, .5 lbs @ arm 55.3
- Comant VHF Antenna P/N CI 177-1, .5 lbs @ arm 155.8

OPERATIONAL GROUND CHECKS: Post installation ground functionional and interference tests were performed IAW Atlantic Aero Doc 24291001.

CONTINUED AIRWORTHINESS INSTRUCTIONS: Reference Atlantic Aero ICA24293010 Rev A dated 6/25/2008 for Instructions for Continued Airworthiness.

WEIGHT & BALANCE and EQUIPMENT LIST: Revised Aircraft Weight & Balance and Equipment List. See Aircraft Weight and Balance records for details.

AFMS: Atlantic Aero FAA Approved Flight Manual Supplement Doc. No. DAS-511128-CE, Rev. A, dated 6/25/08 inserted in the Airplane Flight Manual.

The above installation meets the requirements for static loading in accordance with A.C.43.13-2B Chapter 1 par. 106 through 114. No changes were noted to the compass system. Further details are on file at C.R.S. # YN8R621Y under W.O. # AVI 10096.

>>>>>>>>>>>>>>END<<<<<<<<<<<<<<<<

☐ Additional Sheets Are Attached

U.S Department of Transportation
Federal Aviation Administration

MAJOR REPAIR AND ALTERATION
(Airframe, Powerplant, Propeller, or Appliance)

Form Approved
OMB No. 2120-0020
11/30/2007

Electronic Tracking Number

For FAA Use Only

INSTRUCTIONS: Print or type all entries. See FAR 43.9, FAR 43 Appendix B, and AC 43.9-1 (or subsequent revision thereof) for instructions and disposition of this form. This report is required by law (49 U.S.C. 1421). Failure to report can result in a civil penalty not to exceed $1,000 for each such violation (Section 901 Federal Aviation Act 1958)

1. Aircraft	Nationality and Registration Mark USA N959JT	Serial No. T20608983	
	Make CESSNA	Model T206H	Series STATIONAIR
2. Owner	Name *(As shown on registration certificate)* CESSNA AIRCRAFT COMPANY	Address *(As shown on registration certificate)* Address ATTN: DEPT 093 3 CESSNA BLVD City WICHITA State KANSAS Zip 67215-1400 Country USA	

3. For FAA Use Only

4. Type		5. Unit Identification			
Repair	Alteration	Unit	Make	Model	Serial Number
☐	☒	AIRFRAME	—	*(As described in Item 1 above)*	—
☐	☐	POWERPLANT			
☐	☐	PROPELLER			
☐	☐	APPLIANCE	Type Manufacturer		

6. Conformity Statement

A. Agency's Name and Address	B. Kind of Agency			
Name YINGLING AVIATION	☐	U.S. Certificated Mechanic	☐	Manufacturer
Address 2010 AIRPORT ROAD	☐	Foreign Certificated Mechanic	C. Certificate No.	
City WICHITA State KS	☒	Certificated Repair Station	YN8R621Y RADIO CLASS 1,2,3	
Zip 67277 Country USA	☐	Certificated Maintenance Organization		

D. I certify that the repair and/or alteration made to the unit(s) identified in item 5 above and described on the reverse or attachments hereto have been made in accordance with the requirements of Part 43 of the U.S. Federal Aviation Regulations and that the information furnished herein is true and correct to the best of my knowledge.

Extended range fuel per 14 CFR Part 43 App. B ☐	Signature/Date of Authorized Individual Leopoldo Ines Jr 11/11/10

7. Approval for Return to Service

Pursuant to the authority given persons specified below, the unit identified in item 5 was inspected in the manner prescribed by the Administrator of the Federal Aviation Administration and is ☒ APPROVED ☐ REJECTED

BY								
		FAA Flt Standards Inspector		Manufacturer		Maintenance Organization		Person Approved by Canadian Department of Transport
		FAA Designee	X	Repair Station		Inspection Authorization		Other *(Specify)*

Certificate or Designation No. YN8R621Y	Signature/Date of Authorized Individual 11/11/10

FAA Form 337 (10-06)

NOTICE

Weight and balance or operating limitation changes shall be entered in the appropriate aircraft record. An alteration must be compatible with all previous alterations to assure continued conformity with the applicable airworthiness requirements.

8. Description of Work Accomplished

(If more space is required, attach additional sheets. Identify with aircraft nationality and registration mark and date work completed.)

USA N959JT	11/11/10
Nationality and Registration Mark	Date

CESSNA T206H – T20608983– N959JT

INSTALLED SYSTEMS: Installed Precise Flight Pulselite Control unit IAW STC SA4005NM.

OPERATIONAL GROUND CHECKS: Required ground tests were performed and the equipment was found to operate normally IAW Precise Flight Installation Manual PPRI-2000 Doc # 015PMAN0001 Rev.O dated May 16, 2007.

CONTINUED AIRWORTHINESS INSTRUCTIONS: Reference Document No. 000PMAN0002 Rev. D (7/07) for Instructions for Continued Airworthiness.

AFMS: FAA Approved Flight Manual Supplement Doc. No. 000PMAN0001Rev. A (7/24/03) was inserted into the Aircraft Flight Manual.

WEIGHT & BALANCE and EQUIPMENT LIST: Revised Aircraft Weight & Balance and Equipment List. See Aircraft Weight & Balance records for details.

The above installation meets the requirements for static loading in accordance with A.C.43.13-2B Chapter 1 par. 106 through 114. No changes were noted to the compass system. Further details are on file at C.R.S. # YN8R621Y under W.O. # AVI 10096.

>>>>>>>>>>>>>>>END<<<<<<<<<<<<<<<<

☐ Additional Sheets Are Attached

U.S Department of Transportation
Federal Aviation Administration

MAJOR REPAIR AND ALTERATION
(Airframe, Powerplant, Propeller, or Appliance)

Form Approved
OMB No. 2120-0020
11/30/2007

Electronic Tracking Number

For FAA Use Only

INSTRUCTIONS: Print or type all entries. See FAR 43.9, FAR 43 Appendix B, and AC 43.9-1 (or subsequent revision thereof) for instructions and disposition of this form. This report is required by law (49 U.S.C. 1421). Failure to report can result in a civil penalty not to exceed $1,000 for each such violation (Section 901 Federal Aviation Act 1958)

1. Aircraft	Nationality and Registration Mark USA N959JT	Serial No. T20608983	
	Make CESSNA	Model T206H	Series STATIONAIR
2. Owner	Name *(As shown on registration certificate)* CESSNA AIRCRAFT COMPANY	Address *(As shown on registration certificate)* Address ATTN: DEPT 093 3 CESSNA BLVD City WICHITA State KANSAS Zip 67215-1400 Country USA	

3. For FAA Use Only

4. Type		5. Unit Identification			
Repair	Alteration	Unit	Make	Model	Serial Number
☐	☒	AIRFRAME	—	*(As described in Item 1 above)*	—
☐	☐	POWERPLANT			
☐	☐	PROPELLER			
☐	☐	APPLIANCE	Type Manufacturer		

6. Conformity Statement

A. Agency's Name and Address	B. Kind of Agency			
Name YINGLING AVIATION	☐	U.S. Certificated Mechanic	☐	Manufacturer
Address 2010 AIRPORT ROAD	☐	Foreign Certificated Mechanic	C. Certificate No.	
City WICHITA State KS	☒	Certificated Repair Station	YN8R621Y RADIO CLASS 1,2,3	
Zip 67277 Country USA	☐	Certificated Maintenance Organization		

D. I certify that the repair and/or alteration made to the unit(s) identified in item 5 above and described on the reverse or attachments hereto have been made in accordance with the requirements of Part 43 of the U.S. Federal Aviation Regulations and that the information furnished herein is true and correct to the best of my knowledge.

Extended range fuel per 14 CFR Part 43 App. B ☐	Signature/Date of Authorized Individual Leopoldo Ines Jr 11/11/10

7. Approval for Return to Service

Pursuant to the authority given persons specified below, the unit identified in item 5 was inspected in the manner prescribed by the Administrator of the Federal Aviation Administration and is ☒ APPROVED ☐ REJECTED

BY		FAA Flt Standards Inspector		Manufacturer		Maintenance Organization		Person Approved by Canadian Department of Transport
		FAA Designee	X	Repair Station		Inspection Authorization		Other *(Specify)*

Certificate or Designation No.	Signature/Date of Authorized Individual 11/11/10

FAA Form 337 (10-06)

NOTICE

Weight and balance or operating limitation changes shall be entered in the appropriate aircraft record. An alteration must be compatible with all previous alterations to assure continued conformity with the applicable airworthiness requirements.

8. Description of Work Accomplished

(If more space is required, attach additional sheets. Identify with aircraft nationality and registration mark and date work completed.)

USA N959JT	11/11/10
Nationality and Registration Mark	Date

CESSNA T206H– T20608983– N959JT

INSTALLED SYSTEMS:

- Installed Atlantic Aero Installation of Cabin Skylights IAW STC SA03123AT-D. Installation completed IAW Atlantic Aero Master Drawing List 23793001 Rev D dated 6/4/08.
- Installed Atlantic Aero Installation of a Rear Camera Window IAW STC SA03122AT-D. Installation completed IAW Atlantic Aero Master Drawing List 23993001 Rev A dated 6/4/08.

CONTINUED AIRWORTHINESS INSTRUCTIONS:

- Reference Atlantic Aero Document No. 23793010 Rev. A dated 6/8/05 for Instructions for Continued Airworthiness Installation of Skylights in the Cessna 206H.
- Reference Atlantic Aero Document No. 23993010 Rev. A dated 6/25/08 for Instructions for Continued Airworthiness. Installation of a rear Camera Window in the Cessna 206H and T206H.

WEIGHT & BALANCE and EQUIPMENT LIST: Revised Aircraft Weight & Balance and Equipment List. See Aircraft Weight & Balance records for details.

The above installation meets the requirements for static loading in accordance with A.C.43.13-2B Chapter 1 par. 106 through 114. No changes were noted to the compass system. Further details are on file at C.R.S. # YN8R621Y under W.O. # AVI 10096.

>>>>>>>>>>>>>>>END<<<<<<<<<<<<<<<<

☐ Additional Sheets Are Attached

U.S Department of Transportation
Federal Aviation Administration

MAJOR REPAIR AND ALTERATION
(Airframe, Powerplant, Propeller, or Appliance)

Form Approved OMB No. 2120-0020 11/30/2007

Electronic Tracking Number

For FAA Use Only

INSTRUCTIONS: Print or type all entries. See FAR 43.9, FAR 43 Appendix B, and AC 43.9-1 (or subsequent revision thereof) for instructions and disposition of this form. This report is required by law (49 U.S.C. 1421). Failure to report can result in a civil penalty not to exceed $1,000 for each such violation (Section 901 Federal Aviation Act 1958)

1. Aircraft	Nationality and Registration Mark USA N959JT	Serial No. T20608983	
	Make CESSNA	Model T206H	Series STATIONAIR
2. Owner	Name *(As shown on registration certificate)* CESSNA AIRCRAFT COMPANY	Address *(As shown on registration certificate)* Address ATTN: DEPT 093 3 CESSNA BLVD City WICHITA State KANSAS Zip 67215-1400 Country USA	

3. For FAA Use Only

4. Type		5. Unit Identification			
Repair	Alteration	Unit	Make	Model	Serial Number
☐	☒	AIRFRAME	—	*(As described in Item 1 above)*	—
☐	☐	POWERPLANT			
☐	☐	PROPELLER			
☐	☐	APPLIANCE	Type Manufacturer		

6. Conformity Statement

A. Agency's Name and Address	B. Kind of Agency		
Name YINGLING AVIATION	☐ U.S. Certificated Mechanic	☐ Manufacturer	
Address 2010 AIRPORT ROAD	☐ Foreign Certificated Mechanic	C. Certificate No.	
City WICHITA State KS	☒ Certificated Repair Station	YN8R621Y RADIO CLASS 1,2,3	
Zip 67277 Country USA	☐ Certificated Maintenance Organization		

D. I certify that the repair and/or alteration made to the unit(s) identified in item 5 above and described on the reverse or attachments hereto have been made in accordance with the requirements of Part 43 of the U.S. Federal Aviation Regulations and that the information furnished herein is true and correct to the best of my knowledge.

Extended range fuel per 14 CFR Part 43 App. B ☐	Signature/Date of Authorized Individual 11/11/10

7. Approval for Return to Service

Pursuant to the authority given persons specified below, the unit identified in item 5 was inspected in the manner prescribed by the Administrator of the Federal Aviation Administration and is ☒ APPROVED ☐ REJECTED

BY								
		FAA Flt Standards Inspector		Manufacturer		Maintenance Organization		Person Approved by Canadian Department of Transport
		FAA Designee	X	Repair Station		Inspection Authorization		Other *(Specify)*

Certificate or Designation No. YN8R621Y	Signature/Date of Authorized Individual 11/11/10

FAA Form 337 (10-06)

NOTICE

Weight and balance or operating limitation changes shall be entered in the appropriate aircraft record. An alteration must be compatible with all previous alterations to assure continued conformity with the applicable airworthiness requirements.

8. Description of Work Accomplished

(If more space is required, attach additional sheets. Identify with aircraft nationality and registration mark and date work completed.)

USA N959JT	11/11/10
Nationality and Registration Mark	Date

CESSNA T206H – T20608983– N959JT

Provisions: Installed antenna doublers under the fuselage for future install of a Directional Finder Antenna.
2 ea provisions at FSS 31.5
2 ea provisions at FSS 44.0

Cut 1 ea opening provision for DF antenna coax. Located on pilot side under the fuselage at FSS 48.0. Fabricated and installed cover plate.

Reference:
AC 43.13-1B
AC 43.13-2B Chpt 3

The above installation meets the requirements for static loading in accordance with A.C.43.13-2B Chapter 1 par. 106 through 114. No changes were noted to the compass system. Further details are on file at C.R.S. # YN8R621Y under W.O. # AVI 10096.

>>>>>>>>>>>>>>END<<<<<<<<<<<<<<<<

☐ Additional Sheets Are Attached

FAA FORM 8130-6, APPLICATION FOR U.S. AIRWORTHINESS CERTIFICATE

Form Approved O.M.B. No. 2120-0018
12/31/2010

Accepted RJ Nov/17/2010

U.S. Department of Transportation
Federal Aviation Administration

APPLICATION FOR U. S. AIRWORTHINESS CERTIFICATE

INSTRUCTIONS - Print or type. Do not write in shaded areas; these are for FAA use only. Submit original only to an authorized FAA Representative. If additional space is required, use attachment. For special flight permits complete Sections II, VI and VII as applicable.

I. AIRCRAFT DESCRIPTION

1. REGISTRATION MARK	2. AIRCRAFT BUILDER'S NAME (Make)	3. AIRCRAFT MODEL DESIGNATION	4. YR MFR	FAA CODING
N959JT	Cessna Aircraft Company	T206H	2010	
5. AIRCRAFT SERIAL NO.	**6. ENGINE BUILDER'S NAME (Make)**	**7. ENGINE MODEL DESIGNATION**		
T20608983	Lycoming Engines	TIO-540-AJ1A		
8. NUMBER OF ENGINES	**9. PROPELLER BUILDER'S NAME (Make)**	**10. PROPELLER MODEL DESIGNATION**	**11. AIRCRAFT IS (Check if applicable)**	
One	McCauley Propeller Systems	B3D36C432/80VSA-1	IMPORT	

II. CERTIFICATION REQUESTED

APPLICATION IS HEREBY MADE FOR: *(Check applicable items)*

A	1	x	*STANDARD AIRWORTHINESS CERTIFICATE (Indicate category)*	x	NORMAL		UTILITY		ACROBATIC		TRANSPORT		COMMUTER		BALLOON		OTHER
B			*SPECIAL AIRWORTHINESS CERTIFICATE (Check appropriate items)*														

7		PRIMARY										
9		LIGHT-SPORT (Indicate Class)		AIRPLANE		POWER-PARACHUTE		WEIGHT-SHIFT CONTROL		GLIDER		LIGHTER THAN AIR
2		LIMITED										
5		PROVISIONAL (Indicate class)	1		Class I							
			2		Class II							
3		RESTRICTED *(Indicate operation(s) to be conducted)*	1		AGRICULTURE AND PEST CONTROL	2		AERIAL SURVEY	3		AERIAL ADVERTISING	
			4		FOREST *(Wildlife conservation)*	5		PATROLLING	6		WEATHER CONTROL	
			0		OTHER (Specify)							
4		EXPERIMENTAL *(Indicate operation(s) to be conducted)*	1		RESEARCH AND DEVELOPMENT	2		AMATEUR BUILT	3		EXHIBITION	
			4		AIR RACING	5		CREW TRAINING	6		MARKET SURVEY	
			0		TO SHOW COMPLIANCE WITH THE CFR	7		OPERATING *(Primary Category)* KIT BUILT AIRCRAFT				
			8		OPERATING LIGHT-SPORT	8A		Existing Aircraft without an airworthiness certificate & do not meet § 103.1				
						8B		Operating Light-Sport Kit-Built				
						8C		Operating light-sport previously issued special light-sport category airworthiness certificate under § 21.90				
8		SPECIAL FLIGHT PERMIT *(Indicate operation (s) to be conducted, then complete Section VI or VII as applicable on reverse side)*	1		FERRY FLIGHT FOR REPAIRS, ALTERATIONS, MAINTENANCE, OR STORAGE							
			2		EVACUATE FROM AREA OF IMPENDING DANGER							
			3		OPERATION IN EXCESS OF MAXIMUM CERTIFICATED TAKE-OFF WEIGHT							
			4		DELIVERING OR EXPORTING	5		PRODUCTION FLIGHT TESTING				
			6		CUSTOMER DEMONSTRATION FLIGHTS							
C	6		MULTIPLE AIRWORTHINESS CERTIFICATE *(check ABOVE: "Restricted Operation" and "Standard" or "Limited" as applicable)*									

III. OWNER'S CERTIFICATION

A. REGISTERED OWNER *(As shown on certificate of aircraft registration)* — IF DEALER, CHECK HERE → x

NAME	ADDRESS
Cessna Aircraft Company	1 Cessna Blvd., PO Box 1996, Independence, KS 67301

B. AIRCRAFT CERTIFICATION BASIS *(Check applicable blocks and complete items as indicated)*

X	AIRCRAFT SPECIFICATION OR TYPE CERTIFICATE DATA SHEET (Give No. and Revision No.) **A4CE – Revision 47**	X	AIRWORTHINESS DIRECTIVES *(Check if all applicable AD's are complied with and give the number of the last AD SUPPLEMENT available in the biweekly series as of the date of application)* **2010-20 Sep 27, 2010**
	AIRCRAFT LISTING (Give page number(s)) **N/A**		SUPPLEMENTAL TYPE CERTIFICATE *(List number of each STC incorporated)* **SA01700LA**

C. AIRCRAFT OPERATION AND MAINTENANCE RECORDS

X	CHECK IF RECORDS IN COMPLIANCE WITH 14 CFR section 91.417	TOTAL AIRFRAME HOURS **3.8**	3	EXPERIMENTAL ONLY *(Enter hours flown since last certificate issued or renewed)* **N/A**

D. CERTIFICATION -I hereby certify that I am the registered owner *(or* his agent) of the aircraft described above, that the aircraft is registered with the Federal Aviation Administration in accordance with Title 49 of the United States Code 44101 et seq. and applicable Federal Aviation Regulations, and that the aircraft has been inspected and is airworthy and eligible for the airworthiness certificate requested.

DATE OF APPLICATION	NAME AND TITLE *(Print or type)*	Signature
Oct 1, 2010	David W. LaPierre Quality Manager, Independence	

IV. INSPECTION AGENCY VERIFICATION

A. THE AIRCRAFT DESCRIBED ABOVE HAS BEEN INSPECTED AND FOUND AIRWORTHY BY (Complete the section only if 14 CFR part 21.183(d) applies).

2		14 CFR PART 121 CERTIFICATE HOLDER *(Give Certificate No.)*	3		CERTIFICATED MECHANIC *(Give Certificate No.)*	6		CERTIFICATED REPAIR STATION *(Give Certificate No.)*
5		AIRCRAFT MANUFACTURER *(Give name or firm)*					

DATE	TITLE	SIGNATURE

V. FAA REPRESENTATIVE CERTIFICATION

(Check ALL applicable block items A *and B)*

A. I find that the aircraft described in Section I or VII meets requirements for

	x	THE CERTIFICATE REQUESTED
4		AMENDMENT OR MODIFICATION OF CURRENT AIRWORTHINESS CERTIFICATE

B. Inspection for a special flight permit under Section VII was conducted by:

	FAA INSPECTOR		FAA DESIGNEE			
	CERTIFICATE HOLDER UNDER		14 CFR part 65		14 CFR part 121 or 135	14 CFR part 145

DATE	MIDO/FSDO Office		DESIGNEE'S SIGNATURE AND NO.		FAA INSPECTOR'S SIGNATURE
Oct 1, 2010	CE-43	4	Robert R. Evans ODA-100129-CE	1	Reviewed by Ed Schalk ASE

10-28-10

VI PRODUCTION FLIGHT TESTING

A MANUFACTURER	
NAME	ADDRESS

B. PRODUCTION BASIS *(Check applicable item)*

☐	PRODUCTION CERTIFICATE *(Give production certificate number)* →
☐	TYPE CERTIFICATE ONLY
☐	APPROVED PRODUCTION INSPECTION SYSTEM

C. GIVE QUANTITY OF CERTIFICATES REQUIRED FOR OPERATING NEEDS

DATE OF APPLICATION	NAME AND TITLE (Print or type)	SIGNATURE

VII. SPECIAL FLIGHT PERMIT PURPOSES OTHER THAN PRODUCTION FLIGHT TEST

A. DESCRIPTION OF AIRCRAFT

REGISTERED OWNER	ADDRESS
BUILDER *(Make)*	MODEL
SERIAL NUMBER	REGISTRATION MARK

B. DESCRIPTION OF FLIGHT CUSTOMER DEMONSTRATION FLIGHTS ☐ *(Check if applicable)*

FROM	TO	
VIA	DEPARTURE DATE	DURATION

c. CREW REQUIRED TO OPERATE THE AIRCRAFT AND ITS EQUIPMENT

		PILOT		CO-PILOT		FLIGHT ENGINEER		OTHER *(Specify)*

D. THE AIRCRAFT DOES NOT MEET THE APPLICABLE AIRWORTHINESS REQUIREMENTS AS FOLLOWS:

E. THE FOLLOWING RESTRICTIONS ARE CONSIDERED NECESSARY FOR SAFE OPERATION: (Use attachment if necessary)

F- CERTIFICATION - I hereby certify that I am the registered owner (or his agent) of the aircraft described above; that the aircraft is registered with the Federal Aviation Administration in accordance with Title 49 of the United States Code 44101 et seq. and applicable Federal Aviation Regulations; and that the aircraft has been inspected and is safe for the flight described.

DATE	NAME AND TITLE *(Print or type)*	SIGNATURE

VIII AIRWORTHINESS DOCUMENTATION(FAA/DESIGNEE use only)

X	A. Operating Limitations and Markings in Compliance with 14 CFR section 91.9, as Applicable		G- Statement of Conformity, FAA Form 8130-9 *(Attach when required)*
	B. Current Operating Limitations Attached		H. Foreign Airworthiness Certification for Import Aircraft *(Attach when required)*
	C. Data, Drawings, Photographs, etc. *(Attach when required)*		I. Previous Airworthiness Certificate issued in Accordance with 14 CFR Section _____ CAR _____ (Original attached)
X	D. Current Weight and Balance Information Available in Aircraft		
	E. Major Repair and Alteration, FAA Form 337 *(Attach when required)*	X	J. Current Airworthiness Certificate Issued in Accordance with 14 CFR Section 21.183 (a)
X	F. This inspection Recorded in Aircraft Records		K. Light-Sport Aircraft Statement of Compliance, FAA Form 8130-15 (Attach when required).

UNITED STATES OF AMERICA

DEPARTMENT OF TRANSPORTATION-FEDERAL AVIATION ADMINISTRATION

STANDARD AIRWORTHINESS CERTIFICATE

1 NATIONALITY AND REGISTRATION MARKS	2 MANUFACTURER AND MODEL	3 AIRCRAFT SERIAL NUMBER	4 CATEGORY
N959JT	Cessna Aircraft Company T206H	T20608983	Normal

5 AUTHORITY AND BASIS FOR ISSUANCE

This airworthiness certificate is issued pursuant to the Federal Aviation Act of 1958 and certifies that, as of the date of issuance, the aircraft to which issued has been inspected and found to conform to the type certificate therefor, to be in condition for safe operation, and has been shown to meet the requirements of the applicable comprehensive and detailed airworthiness code as provided by Annex 8 to the Convention on International Civil Aviation, except as noted herein.

Exceptions:

None

DUPLICATE

6 TERMS AND CONDITIONS

Unless sooner surrendered, suspended, revoked, or a termination date is otherwise established by the Administrator, this airworthiness certificate is effective as long as the maintenance, preventative maintenance, and alterations are performed in accordance with Parts 21, 43, and 91 of the Federal Aviation Regulations, as appropriate, and the aircraft is registered in the United States.

DATE OF ISSUANCE	FAA REPRESENTATIVE	DESIGNATION NUMBER
Oct 1, 2010	Robert R. Evans	ODA-100129-CE

Any alteration, reproduction, or misuse of this certificate may be punishable by a fine not exceeding $1,000 or imprisonment not exceeding 3 years or both.

THIS CERTIFICATE MUST BE DISPLAYED IN THE AIRCRAFT IN ACCORDANCE WITH APPLICABLE FEDERAL AVIATION REGULATIONS.

FAA Form 8100-2 (3-08)